圧電サウンダ
Piezoelectric Sounders
Type EFB R□/A□/B□

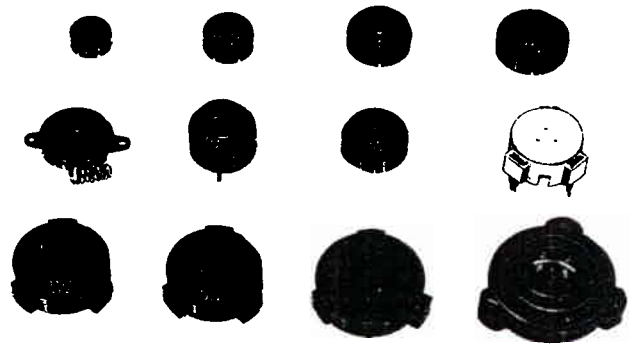

圧電サウンダは，圧電振動板をケース内に組み込み音響効果と取り扱いの容易性を図ったもので，リード線タイプとプリント基板への挿着を考慮した端子タイプがあります。

Piezoelectric Sounder consisting of piezoelectric ceramic buzzer element enclosed in a housing, is designed to obtain an efficient acoustic effect and convenient mounting.
The units are suitable for mounting on P.C. board.

■特長
- 消費電力が小(通常1 mA以下)
- 無接点構造のため，寿命は半永久的で電気雑音がなく回路への影響がゼロ
- 薄形(RCタイプ，ALタイプ)
- 広い再生周波数範囲
- 電話機リンガ音にも対応可

Features
- Low power consumption
- Long life and no-noise due to non-contact
- No magnetic field is generated
- Thin in thickness, and space saving
- High sound pressure level
- Covering wide frequency range

■用途
- 各種家庭用電子機器、時計、玩具などの報知音用
- 各種OA機器、電卓、カメラなどの確認音用
- ガス洩れ警報器、煙感知器、自動車電装品などの警報音用
- 電話器リンガ音用

Applications
- Home electric equipment, clook, toy etc
- OA equipment, calculator, camera etc
- For alarm.(Gas leakage detector, smoke detector etc.)
- For telephone ringer

■品番呼称法 Explanation of Part Numbers

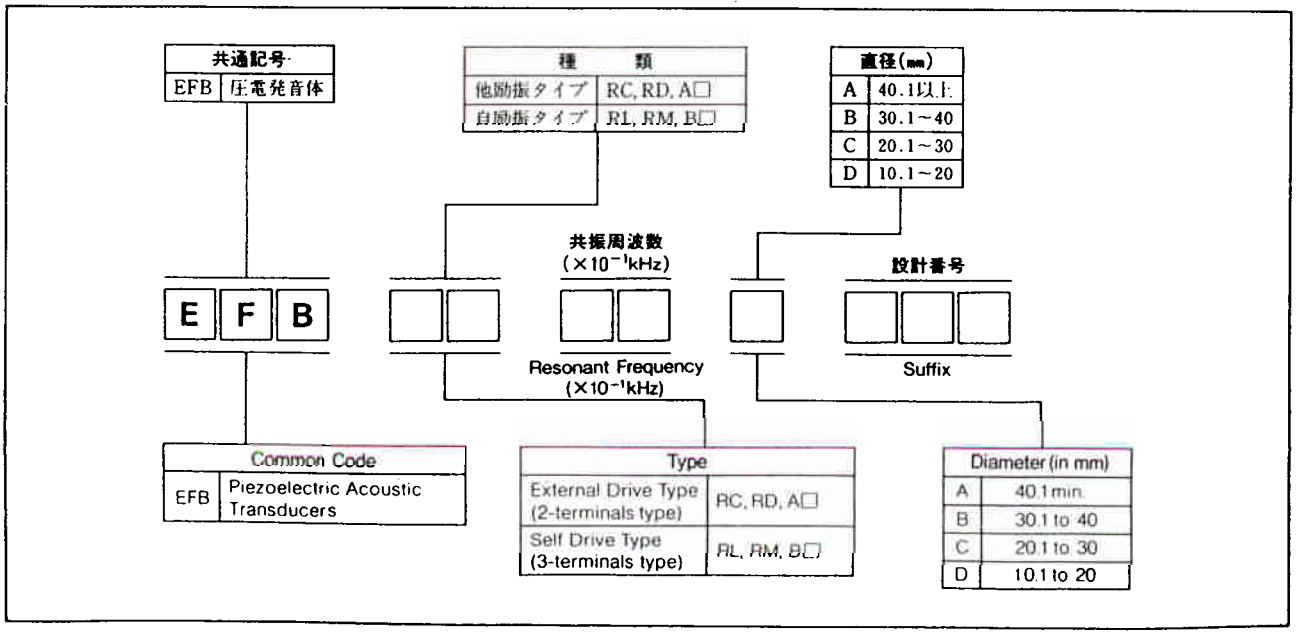

■定格・性能　Ratings and Characteristics

2端子形・他励振タイプ

2-Terminals,External-Drive Type

品　番 Part No.	電　圧　感　度 Sound Pressure Level (Measuring conditions)	静電容量 Capacitance at 1 kHz	最大許容入力電圧 Maximum Input Voltage
EFBAA14D001	74 dB min. (15 Vp-p, 4 kHz Square wave, 10 cm)	8500 pF	25 Vp-p
EFBAA40D102	86 dB min. (15 Vp-p, 4 kHz Square wave, 10 cm)	7000 pF	
EFBRD22C41/45	85 dB min. (15 Vp-p, 4 kHz Square wave, 10 cm)	15000 pF	30 Vp-p
EFBRD22C413	80 dB min. (15 Vp-p, 4 kHz Square wave, 10 cm)	15000 pF	
EFBRD22C415	98 dB min. (15 Vp-p, 4 kHz Square wave, 10 cm)	15000 pF	
EFBRD24C411	85 dB min. (15 Vp-p, 4 kHz Square wave, 10 cm)	10000 pF	
EFBRC24C41B	85 dB min. (15 Vp-p, 4 kHz Square wave, 10 cm)	10000 pF	
EFBRD24C41	80 dB min. (15 Vp-p, 4 kHz Square wave, 10 cm)	12000 pF	
EFBAF24C101	88 dB min. (15 Vp-p, 2.5 kHz Square wave, 10 cm)	24000 pF	
EFBAL30D402*	70 dB min. (15 Vp-p, 3 kHz Square wave, 10 cm)	13000 pF	25 Vp-p

- Operating Temperature Range: −10 to 60 °C
- Storage Temperature Range: −20 to 70 °C

* For Telephone Ringer

■形状寸法図　Dimensions in mm (not to scale)

2-Terminals, External-Drive Type

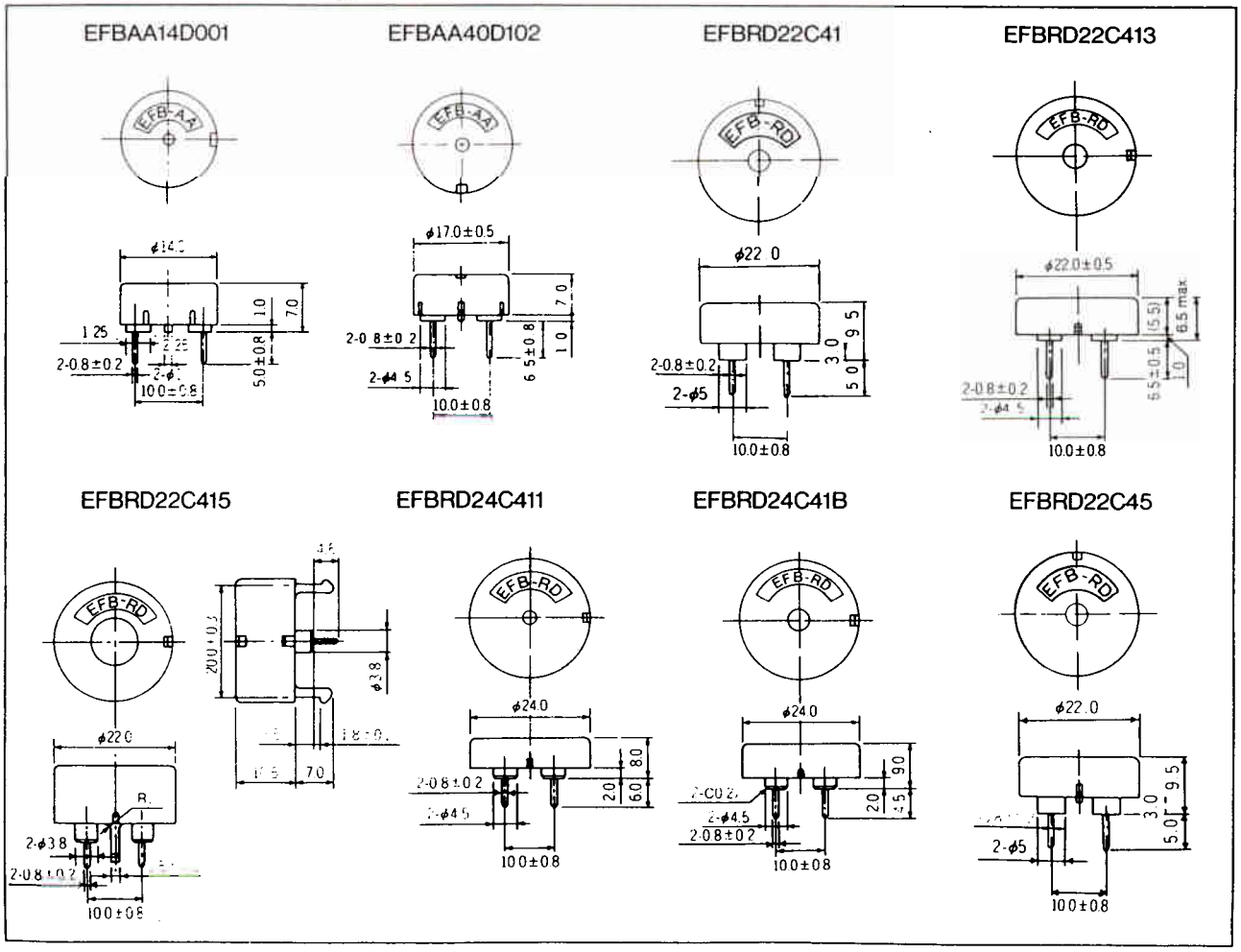

■形状寸法図　Dimensions in mm (not to scale)

2-Terminals, External-Drive Type

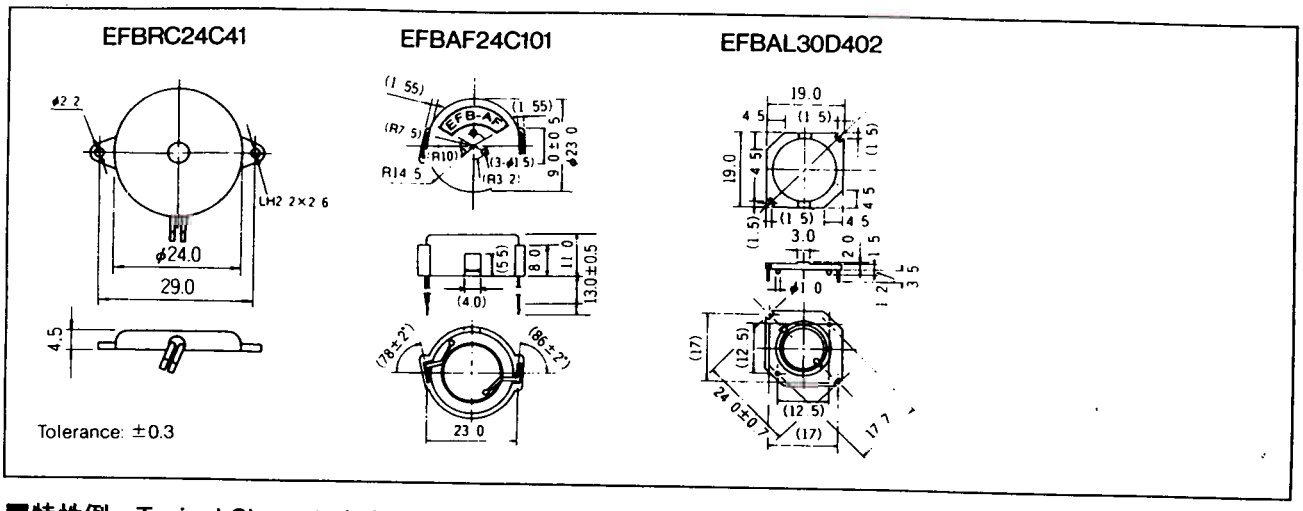

■特性例　Typical Characteristics

Frequency vs. Sound Pressure Level (External Drive Type)

EFBAA14D001

Input voltage: 10 Vp-p, Square wave
Distance : 10 cm

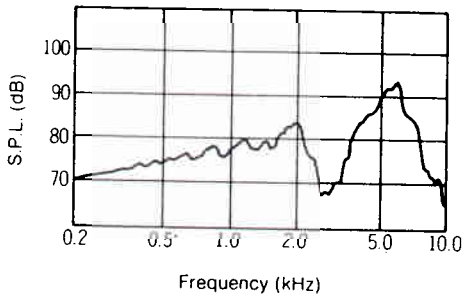

EFBAA40D102

Input voltage: 10 Vp-p, Square wave
Distance : 10 cm

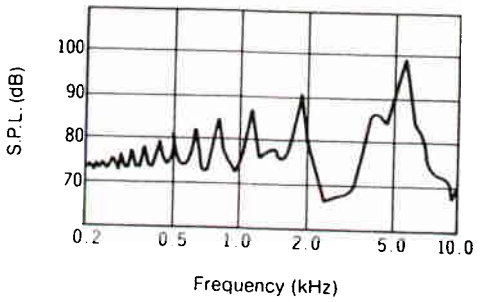

EFBRD22C411

Input voltage: 10 Vp-p, Square wave
Distance : 10 cm

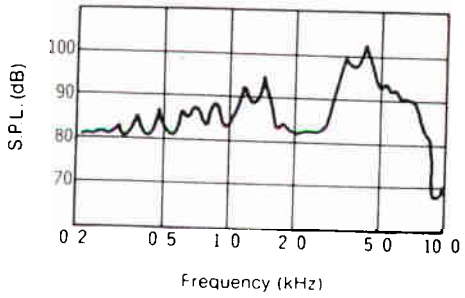

EFBRD22C413

Input voltage: 10 Vp-p, Square wave
Distance : 10 cm

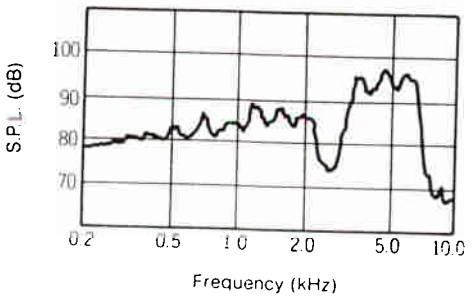

EFBRD22C415

Input voltage 10 Vp-p, Square wave
Distance 10 cm

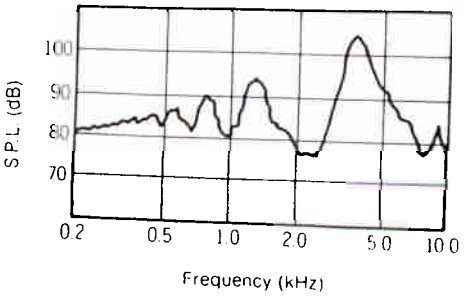

EFBRC24C41

Input voltage 10 Vp-p, Square wave
Distance 10 cm

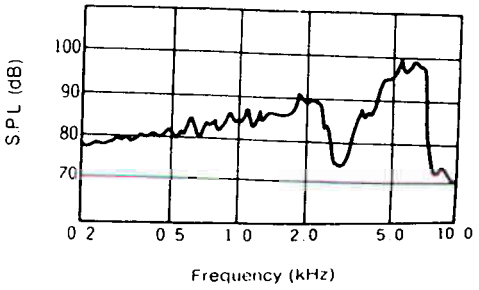

■定格・性能　Ratings and Characteristics

3端子形・自励振タイプ

3-Terminals,Self Drive Type

品　番 Part No.	出力レベル Sound Pressure Level (Measuring conditions)	発振周波数 Oscillating Frequency	駆動回路 Standard Driving Circuit
EFBRM38C13	90 dB min. (10 VDC, 10 cm)	3.5±0.6 kHz	●下記測定回路による ●Cf.Test circuit diagram below
EFBRM38C123	90 dB min. (10 VDC, 10 cm)		
EFBRL20C102	85 dB min. (12 VDC, 10 cm)	2.0±0.4 kHz	
EFBRL28C11	98 dB min. (12 VDC, 10 cm)	2.8±0.4 kHz	
EFBRL37C20/22	100/80 dB min. (12 VDC, 10 cm)	3.9/3.7±0.5 kHz	
EFBBD32B21	106 dB min. (12 VDC, 10 cm)	3.2±0.3 kHz	

- Operating Temperature Range: −10 to 60 °C
- Storage Temperature Range: −20 to 70 °C

■形状寸法図　Dimensions in mm(not to scale)

3-Terminals, Self-Drive Type

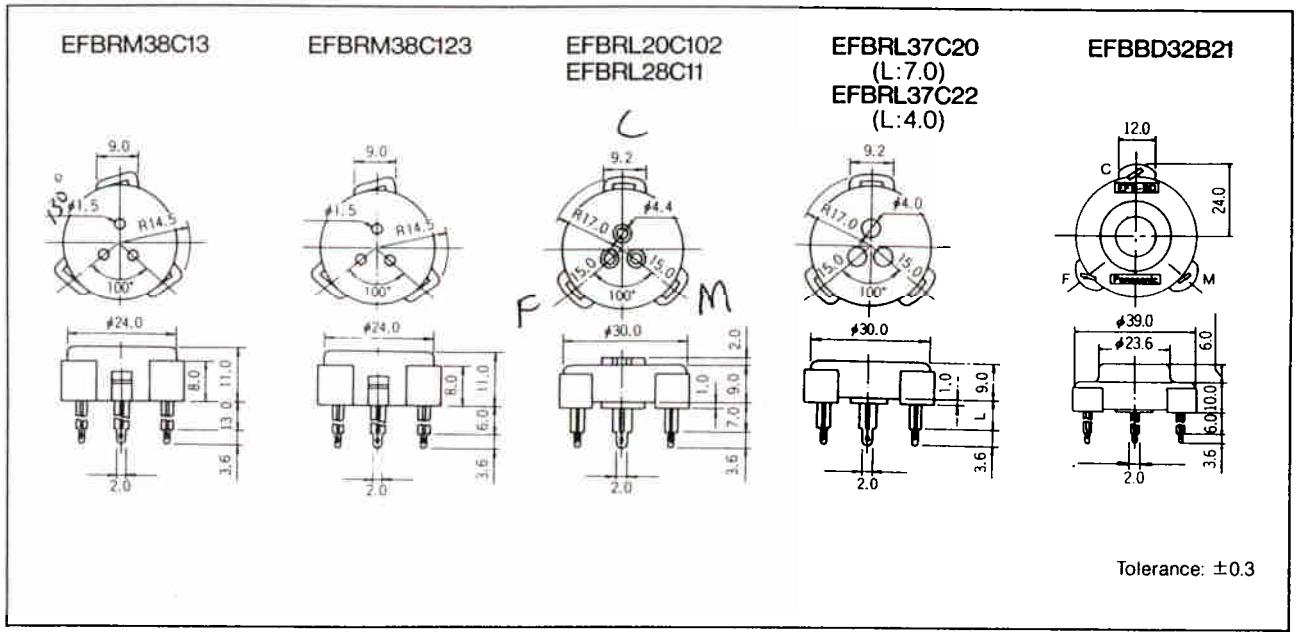

■測定回路　Test Circuit Diagram(for Self Drive Type)

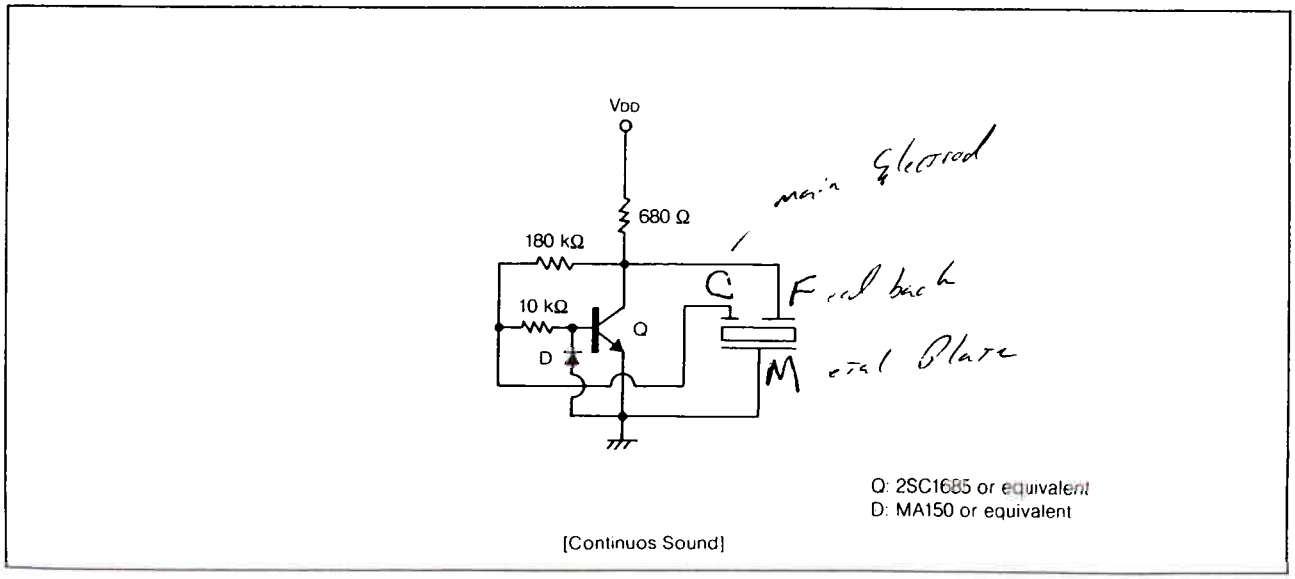

Supply Voltage vs. Sound Pressure Level
(Self-Drive Type)

EFBRL37C20

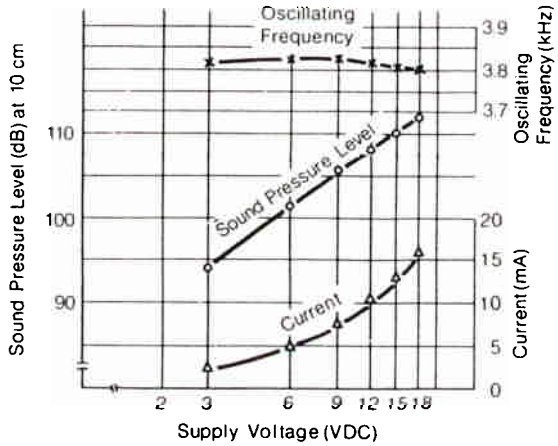

EFBBD32B21

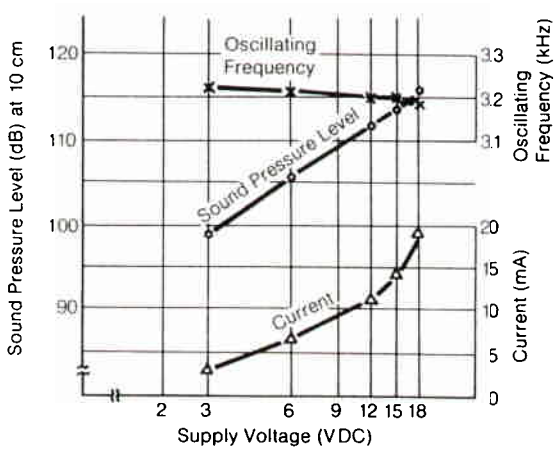

Temperature Characteristics
(Self-Drive Type)
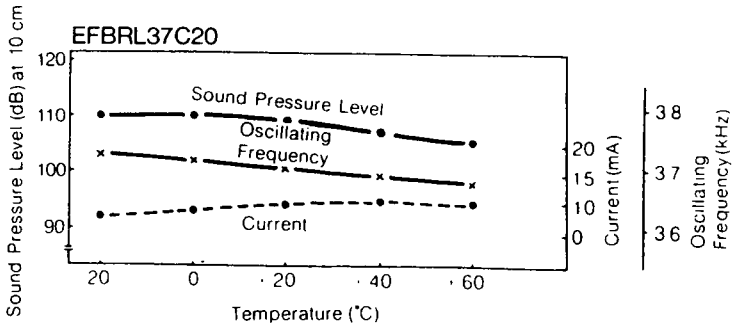
EFBRL37C20