SINGLE COLOR LED

1102W Standard Type with Inner Lens

S T A N D A R D C O L O R

Outline Dimensions

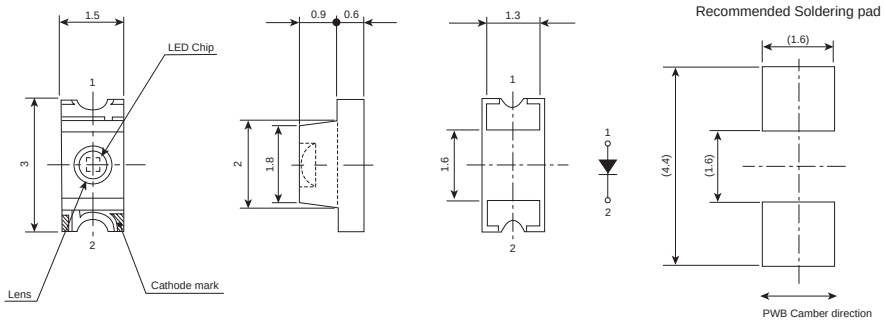

Unit: mm
Tolerances ± 0.1

Absolute Maximum Ratings

(Ta=25°C)

Item	Symbol	Red BR	Orange AA	Yellow AY	Yellow Green PY	Green PG	Pure Green BG	Units
Power Dissipation	Pd	60	75	75	75	75	75	mW
Forward Current	I_F	30	30	30	30	30	30	mA
Peak Forward Current	I_{FM}	70	70	70	70	70	70	mA
Reverse Voltage	V_R	4	4	4	4	4	4	V
Operating Temperature	Topr	-30 to +85						°C
Storage Temperature	Tstg	-40 to +100						°C
Derating*	ΔI_F	0.42 (DC) 0.93 (Pulse)						mA/°C

* Ta=25°C, I_{FM} applies for the pulse width ≤ 1msec. and duty cycle ≤1/20.

Electro-Optical Characteristics

*The viewing angle is an average and will vary by color

(Ta=25°C)

Part No.	Material	Emitted Color	Lens Color	Luminous Intensity I_V MIN.	TYP.	I_F	Wavelength Peak λp TYP.	Dominant λd TYP.	Spectral Line Half Width Δλ TYP.	I_F	Forward Voltage V_F TYP	MAX.	I_F	Reverse Current I_R MAX.	V_R	Viewing Angle (2θ 1/2)
BR1102W	GaAlAs	Red	Water Clear	12.0	33.6	20	660	647	30	20	1.7	2.0	20	100	4	70°
AA1102W	GaAsP	Orange		5.0	9.0	20	605	606	30	20	2.2	2.5	20	100	4	
AY1102W	GaAsP	Yellow		3.0	6.0	20	580	590	30	20	2.2	2.5	20	100	4	
PY1102W	GaP	Yellow Green		12.0	24	20	570	572	30	20	2.1	2.5	20	100	4	
PG1102W	GaP	Green		6.0	12	20	560	567	30	20	2.1	2.5	20	100	4	
BG1102W	GaP	Pure Green		1.8	4.8	20	555	558	30	20	2.1	2.5	20	100	4	
Units				mcd		mA	nm			mA	V		mA	µA	V	Deg.

Spatial Distribution

*Spatial distribution is viewed as a typical illustration and will vary by color
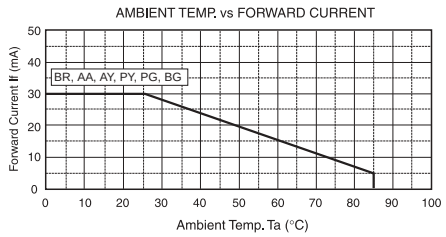
Operation Current Derating Chart