角型および三角形型LED　Angular & Triangular Type LEDs

Ta=25℃

	機種名 Type No.	波長 Peak Wave-length nm(Color)	樹脂外観 Lens Appearance	絶対最大定格 Absolute Maximum Ratings IF mA	VR V	PD mW	Topr ℃	電気的光学的特性 Electro-Optical Characteristics VF Typ. V	IF mA	Luminous Intensity Typ. mcd	IF mA	IR Max. (VR=3V) μA
角型	SLP-151B-51	700 (R)	Color Diffused	25	3	70	−25~80	1.9	5	0.55	5	10
	SLP-251B-51	565 (G)	Color Diffused	25	3	70	−25~80	2.1	20	1.5	20	10
	SLP-451B-51	585 (Y)	Color Diffused	25	3	70	−25~80	2.1	20	2.5	20	10
	SLP-174B-51	700 (R)	Color Diffused	25	3	70	−25~80	1.9	5	0.55	5	10
	SLP-274B-51	565 (G)	Color Diffused	25	3	70	−25~80	2.1	20	1.5	20	10
	SLP-155B-81	700 (R)	Color Diffused	25	3	70	−25~80	1.9	5	0.8	5	10
	SLP-255B-81	565 (G)	Color Diffused	25	3	70	−25~80	2.1	20	2.3	20	10
	SLP-165B-51	700 (R)	Color Diffused	25	3	70	−25~80	1.9	5	0.4	5	10
	SLP-265B-51	565 (G)	Color Diffused	25	3	70	−25~80	2.1	20	1.7	20	10
	SLP-153B-51	700 (R)	Color Diffused	25	3	70	−25~80	2.9	5	0.7	5	10
	SLP-253B-51	565 (G)	Color Diffused	25	3	70	−25~80	2.1	20	1.5	20	10
	SLP-453B-51	585 (Y)	Color Diffused	25	3	70	−25~80	2.1	20	3.5	20	10
	SLP-183B-81	700 (R)	Color Diffused	25	3	70	−25~80	1.9	5	0.55	5	10
	SLP-283B-81	565 (G)	Color Diffused	25	3	70	−25~80	2.1	20	1.9	20	10
三角型	SLP-139B-51	700 (R)	Color Diffused	25	3	70	−25~80	1.9	5	0.7	5	10
	SLP-239B-51	565 (G)	Color Diffused	25	3	70	−25~80	2.1	20	1.8	20	10
	SLP-439B-51	585 (Y)	Color Diffused	25	3	70	−25~80	2.1	20	1.8	20	10
	SLP-176B-51	700 (R)	Color Diffused	25	3	70	−25~80	1.9	5	5.0	5	10
	SLP-276B-51	565 (G)	Color Diffused	25	3	70	−25~80	2.1	20	1.8	20	10
	SLP-476B-51	585 (Y)	Color Diffused	25	3	70	−25~80	2.1	20	1.8	20	10

■外観図　Package Dimensions

Tolerance : ±0.2
Unit : mm

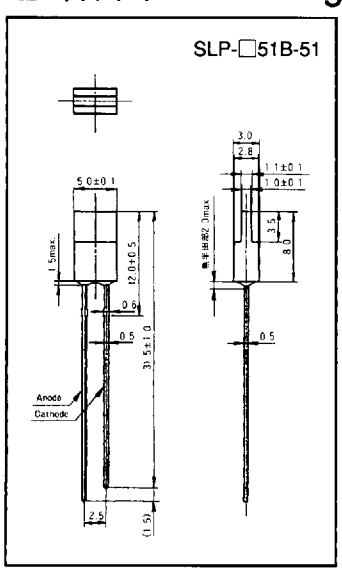

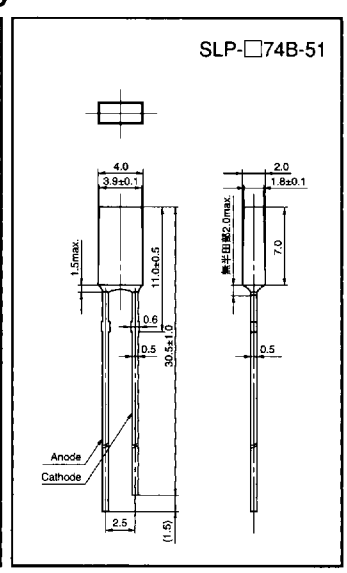

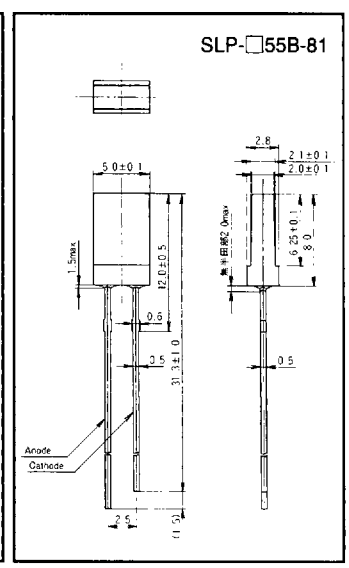

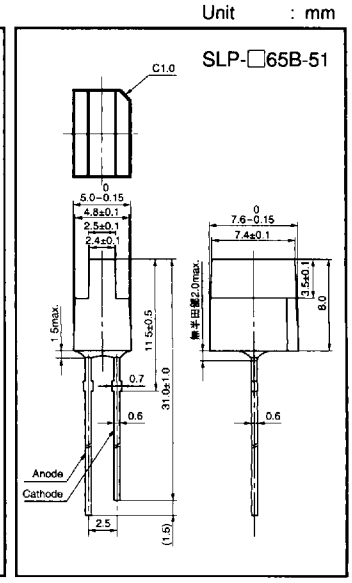

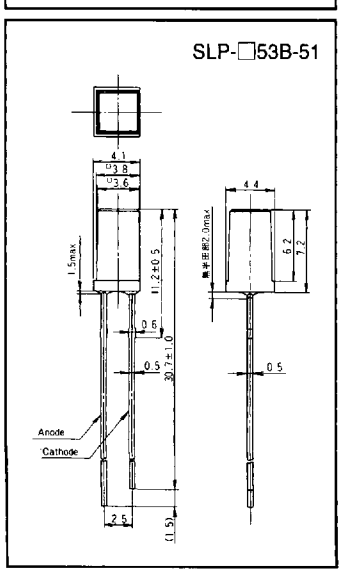

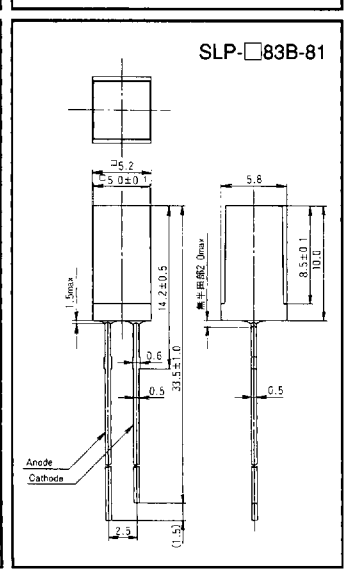

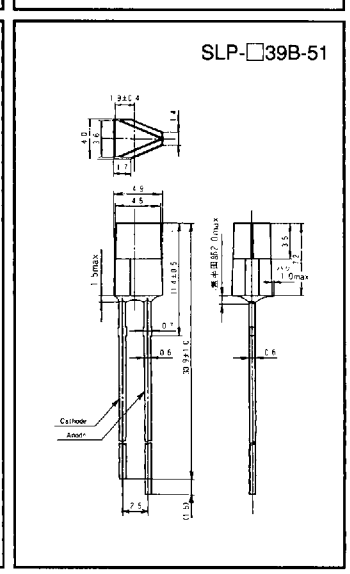

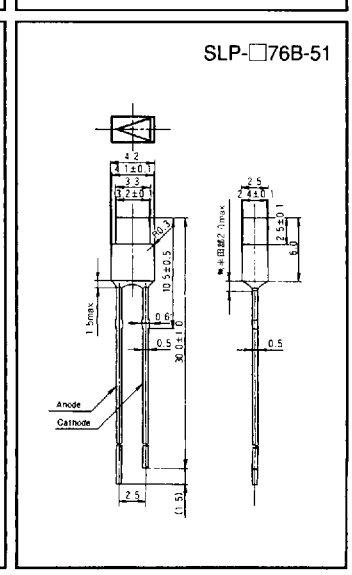

7997076 0013617 31T