MOTOROLA

MC74AC125
MC74ACT125

Quad Buffer With 3-State Outputs

- Outputs Source/Sink
- 'ACT125 Has TTL Compatible Inputs

QUAD BUFFER
WITH 3-STATE OUTPUTS

N SUFFIX
CASE 646-06
PLASTIC

PIN ASSIGNMENTS

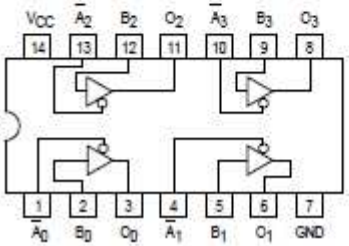

PIN NAMES

$\overline{A}_n$, B_n	Inputs
O_n	Outputs

FUNCTION TABLE

Inputs		Output
A_n	B_n	O_n
L	L	L
L	H	H
H	X	Z

H = High Voltage Level
L = Low Voltage Level
Z = High Impedance
X = Immaterial

MAXIMUM RATINGS*

Symbol	Parameter	Value	Unit
V_{CC}	DC Supply Voltage (Referenced to GND)	−0.5 to +7.0	V
V_{in}	DC Input Voltage (Referenced to GND)	−0.5 to V_{CC} + 0.5	V
V_{out}	DC Output Voltage (Referenced to GND)	−0.5 to V_{CC} + 0.5	V
I_{in}	DC Input Current, per Pin	± 20	mA
I_{out}	DC Output Sink/Source Current, per Pin	± 50	mA
I_{CC}	DC V_{CC} or GND Current per Output Pin	± 50	mA
T_{stg}	Storage Temperature	−65 to +150	°C

* Maximum Ratings are those values beyond which damage to the device may occur. Functional operation should be restricted to the Recommended Operating Conditions.

RECOMMENDED OPERATING CONDITIONS

Symbol	Parameter		Min	Typ	Max	Unit
V_{CC}	Supply Voltage	'AC	2.0	5.0	6.0	V
		'ACT	4.5	5.0	5.5	
V_{in}, V_{out}	DC Input Voltage, Output Voltage (Ref. to GND)		0		V_{CC}	V
t_r, t_f	Input Rise and Fall Time (Note 1) 'AC Devices except Schmitt Inputs	V_{CC} @ 3.0 V		150		ns/V
		V_{CC} @ 4.5 V		40		
		V_{CC} @ 5.5 V		25		
T_J	Junction Temperature (PDIP)				140	°C
T_A	Operating Ambient Temperature Range		−40	25	85	°C
I_{OH}	Output Current — HIGH				−24	mA
I_{OL}	Output Current — LOW				24	mA

1. V_{in} from 30% to 70% V_{CC}; see individual Data Sheets for devices that differ from the typical input rise and fall times.
2. V_{in} from 0.8 V to 2.0 V; see individual Data Sheets for devices that differ from the typical input rise and fall times.

DC CHARACTERISTICS

Symbol	Parameter	V_{CC} (V)	74AC T_A = +25°C Typ	74AC T_A = +25°C Guaranteed Limits	74AC T_A = −40°C to +85°C Guaranteed Limits	Unit	Conditions
V_{IH}	Minimum High Level Input Voltage	3.0	1.5	2.1	2.1	V	V_{OUT} = 0.1 V or V_{CC} − 0.1 V
		4.5	2.25	3.15	3.15		
		5.5	2.75	3.85	3.85		
V_{IL}	Maximum Low Level Input Voltage	3.0	1.5	0.9	0.9	V	V_{OUT} = 0.1 V or V_{CC} − 0.1 V
		4.5	2.25	1.35	1.35		
		5.5	2.75	1.65	1.65		
V_{OH}	Minimum High Level Output Voltage	3.0	2.99	2.9	2.9	V	I_{OUT} = − 50 μA
		4.5	4.49	4.4	4.4		
		5.5	5.49	5.4	5.4		
		3.0		2.56	2.46	V	*V_{IN} = V_{IL} or V_{IH} I_{OH} −12 mA
		4.5		3.86	3.76		− 24 mA
		5.5		4.86	4.76		− 24 mA
V_{OL}	Minimum Low Level Output Voltage	3.0	0.002	0.1	0.1	V	I_{OUT} = 50 μA
		4.5	0.001	0.1	0.1		
		5.5	0.001	0.1	0.1		
		3.0		0.36	0.44	V	*V_{IN} = V_{IL} or V_{IH} I_{OL} 12 mA
		4.5		0.36	0.44		24 mA
		5.5		0.36	0.44		24 mA
I_{IN}	Maximum Input Leakage Current	5.5		±0.1	±1.0	μA	V_I = V_{CC}, GND
I_{OZ}	V_I (OE) = V_{IL}, V_{IH} V_I = V_{CC}, GND V_O = V_{CC}, GND	5.5		±0.5	±5.0	μA	V_I (OE) = V_{IL}, V_{IH} V_I = V_{CC}, GND V_O = V_{CC}, GND
I_{OLD}	†Minimum Dynamic Output Current	5.5			75	mA	V_{OLD} = 1.65 V Max
I_{OHD}		5.5			−75	mA	V_{OHD} = 3.85 V Min
I_{CC}	Maximum Quiescent Supply Current	5.5		8.0	80	μA	V_{IN} = V_{CC} or GND

* All outputs loaded; thresholds on input associated with output under test.
† Maximum test duration 2.0 ms, one input loaded at a time.
Note: I_{IN} and I_{CC} @ 3.0 V are guaranteed to be less than or equal to the respective limit @ 5.5 V.

AC CHARACTERISTICS

Symbol	Parameter	V_{CC}* (V)	74AC T_A = +25°C C_L = 50 pF		74AC T_A = −40°C to +85°C C_L = 50 pF		Unit
			Min	Max	Min	Max	
t_{PLH}	Propagation Delay Data to Output	3.3 5.0	1.0 1.0	9.0 7.0	1.0 1.0	10 7.5	ns
t_{PHL}	Propagation Delay Data to Output	3.3 5.0	1.0 1.0	9.0 7.0	1.0 1.0	10 7.5	ns
t_{PZH}	Output Enable Time	3.3 5.0	1.0 1.0	10.5 7.0	1.0 1.0	11 8.0	ns
t_{PZL}	Output Enable Time	3.3 5.0	1.0 1.0	10 8.0	1.0 1.0	11 8.5	ns
t_{PHZ}	Output Disable Time	3.3 5.0	1.0 1.0	10 9.0	1.0 1.0	10.5 9.5	ns
t_{PLZ}	Output Disable Time	3.3 5.0	1.0 1.0	10.5 9.0	1.0 1.0	11.5 9.5	ns

* Voltage Range 3.3 V is 3.3 V ±0.3 V.
Voltage Range 5.0 V is 5.0 V ±0.5 V.

DC CHARACTERISTICS

Symbol	Parameter	V_{CC} (V)	74ACT T_A = +25°C		74ACT T_A = −40°C to +85°C	Unit	Conditions
			Typ	Guaranteed Limits			
V_{IH}	Minimum High Level Input Voltage	4.5 5.5	1.5 1.5	2.2 2.0	2.0 2.0	V	V_{OUT} = 0.1 V or V_{CC} − 0.1 V
V_{IL}	Maximum Low Level Input Voltage	4.5 5.5	1.5 1.5	0.8 0.8	0.8 0.8	V	V_{OUT} = 0.1 V or V_{CC} − 0.1 V
V_{OH}	Minimum High Level Output Voltage	4.5 5.5	4.49 5.49	4.4 5.4	4.4 5.4	V	I_{OUT} = −50 μA
		4.5 5.5		3.86 4.86	3.76 4.76	V	*V_{IN} = V_{IL} or V_{IH} I_{OH} −24 mA −24 mA
V_{OL}	Minimum Low Level Output Voltage	4.5 5.5	0.001 0.001	0.1 0.1	0.1 0.1	V	I_{OUT} = −50 μA
		4.5 5.5		0.36 0.36	0.44 0.44	V	*V_{IN} = V_{IL} or V_{IH} I_{OH} −24 mA −24 mA
I_{IN}	Maximum Input Leakage Current	5.5		±0.1	±1.0	μA	V_I = V_{CC}, GND
I_{OZ}	V_I (OE) = V_{IL}, V_{IH} V_I = V_{CC}, GND V_O = V_{CC} , GND	5.5		±0.5	±5.0	μA	V_I (OE) = V_{IL}, V_{IH} V_I = V_{CC}, GND V_O = V_{CC}, GND
ΔI_{CCT}	Additional Max. I_{CC}/Input	5.5	0.6		1.5	mA	V_I = V_{CC} − 2.1 V
I_{OLD}	†Minimum Dynamic Output Current	5.5			75	mA	V_{OLD} = 1.65 V Max
I_{OHD}		5.5			−75	mA	V_{OHD} = 3.85 V Min
I_{CC}	Maximum Quiescent Supply Current	5.5		8.0	80	μA	V_{IN} = V_{CC} or GND

* All outputs loaded; thresholds on input associated with output under test.
† Maximum test duration 2.0 ms, one input loaded at a time.

AC CHARACTERISTICS

Symbol	Parameter	V_{CC}* (V)	74ACT T_A = +25°C C_L = 50 pF		74ACT T_A = −40°C to +85°C C_L = 50 pF		Unit
			Min	Max	Min	Max	
t_{PLH}	Propagation Delay Data to Output	5.0	1.0	9.0	1.0	10	ns
t_{PHL}	Propagation Delay Data to Output	5.0	1.0	9.0	1.0	10	ns
t_{PZH}	Output Enable Time	5.0	1.0	8.5	1.0	9.5	ns
t_{PZL}	Output Enable Time	5.0	1.0	9.5	1.0	10.5	ns
t_{PHZ}	Output Disable Time	5.0	1.0	9.5	1.0	10.5	ns
t_{PLZ}	Output Disable Time	5.0	1.0	10	1.0	10.5	ns

* Voltage Range 5.0 V is 5.0 V ±0.5 V.

CAPACITANCE

Symbol	Parameter	Value Typ	Unit	Test Conditions
C_{IN}	Input Capacitance	4.5	pF	V_{CC} = 5.0 V
C_{PD}	Power Dissipation Capacitance	45	pF	V_{CC} = 5.0 V

EIAJ–14
M SUFFIX
14 PIN PLASTIC EIAJ PACKAGE
CASE 965–01
ISSUE O

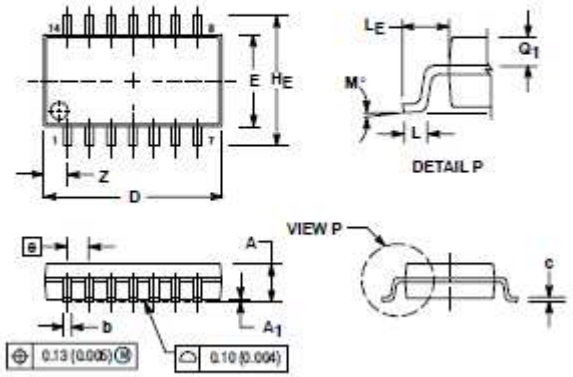

NOTES:
1. DIMENSIONING AND TOLERANCING PER ANSI Y14.5M, 1982.
2. CONTROLLING DIMENSION: MILLIMETER.
3. DIMENSIONS D AND E DO NOT INCLUDE MOLD FLASH OR PROTRUSIONS AND ARE MEASURED AT THE PARTING LINE. MOLD FLASH OR PROTRUSIONS SHALL NOT EXCEED 0.15 (0.006) PER SIDE.
4. TERMINAL NUMBERS ARE SHOWN FOR REFERENCE ONLY.
5. THE LEAD WIDTH DIMENSION (b) DOES NOT INCLUDE DAMBAR PROTRUSION. ALLOWABLE DAMBAR PROTRUSION SHALL BE 0.08 (0.003) TOTAL IN EXCESS OF THE LEAD WIDTH DIMENSION AT MAXIMUM MATERIAL CONDITION. DAMBAR CANNOT BE LOCATED ON THE LOWER RADIUS OR THE FOOT. MINIMUM SPACE BETWEEN PROTRUSIONS AND ADJACENT LEAD TO BE 0.46 (.018).

DIM	MILLIMETERS MIN	MILLIMETERS MAX	INCHES MIN	INCHES MAX
A	—	2.05	—	0.081
A_1	0.05	0.20	0.002	0.008
b	0.35	0.50	0.014	0.020
c	0.18	0.27	0.007	0.011
D	9.90	10.50	0.390	0.413
E	5.10	5.45	0.201	0.215
e	1.27 BSC		0.050 BSC	
H_E	7.40	8.20	0.291	0.323
Q	0.50	0.85	0.020	0.033
L_E	1.10	1.50	0.043	0.059
M	0°	10°	0°	10°
Q_1	0.70	0.90	0.028	0.035
Z	—	1.42	—	0.056