Next Generation OP07, Ultralow Offset Voltage Operational Amplifier

OP77

FEATURES

- **Outstanding Gain Linearity**
- **Ultra High Gain ..... 5000V/mV Min**
- **Low V_{OS} Over Temperature ..... 60μV Max**
- **Excellent TCV_{OS} ..... 0.3μV/°C Max**
- **High PSRR ..... 3μV/V Max**
- **Low Power Consumption ..... 60mW Max**
- **Fits OP-07, 725, 108A/308A, 741 Sockets**
- **Available in Die Form**

ORDERING INFORMATION †

PACKAGE				OPERATING TEMPERATURE RANGE
TO-99	CERDIP 8-PIN	PLASTIC 8-PIN	LCC 20-PIN	
OP77AJ*	OP77AZ*	–	–	MIL
OP77EJ	OP77EZ	–	–	IND
–	–	OP77EP	–	COM
OP77BJ*	OP77BZ*	–	OP77BRC/883	MIL
OP77FJ	OP77FZ	–	–	IND
–	–	OP77FP	–	COM
–	–	OP77GP	–	COM
–	–	OP77GS††	–	COM
–	–	OP77HP	–	XIND
–	–	OP77HS††	–	XIND

* For devices processed in total compliance to MIL-SDT-883, add /883 after part number. Consult factory for 883 data sheet.

† Burn-in is available on commercial and industrial temperature range parts in CerDIP, plastic DIP, and TO-can packages.

†† For availability and burn-in information on SO and PLCC packages, contact your local sales office.

GENERAL DESCRIPTION

The OP-77 significantly advances the state-of-the-art in precision op amps. The OP-77's outstanding gain of 10,000,000 or more is maintained over the full ±10V output range. This exceptional gain-linearity eliminates incorrectable system nonlinearities common in previous monolithic op amps, and provides superior performance in high closed-loop-gain applications. Low initial V_{OS} drift and rapid stabilization time, combined with only 50mW power consumption, are significant improvements over previous designs. These characteristics, plus the exceptional TCV_{OS} of 0.3μV/°C maximum and the low V_{OS} of 25μV maximum, eliminates the need for V_{OS} adjustment and increases system accuracy over temperature.

PSRR of 3μV/V (110dB) and CMRR of 1.0μV/V maximum virtually eliminiate errors caused by power supply drifts and common-mode signals. This combination of outstanding characteristics makes the OP-77 ideally suited for high-resolution instrumentation and other tight error budget systems.

Continued

PIN CONNECTIONS

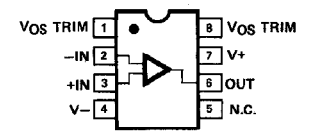

EPOXY MINI-DIP (P-Suffix)
8-PIN HERMETIC DIP (Z-Suffix)

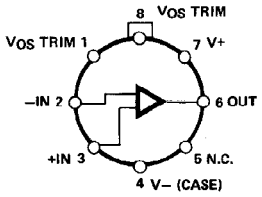

TO-99 (J-Suffix)

8-PIN SO (S-Suffix)

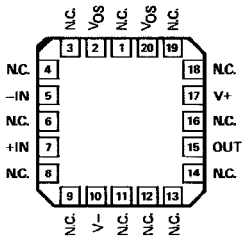

OP-77BRC/883 LCC (RC-Suffix)

SIMPLIFIED SCHEMATIC

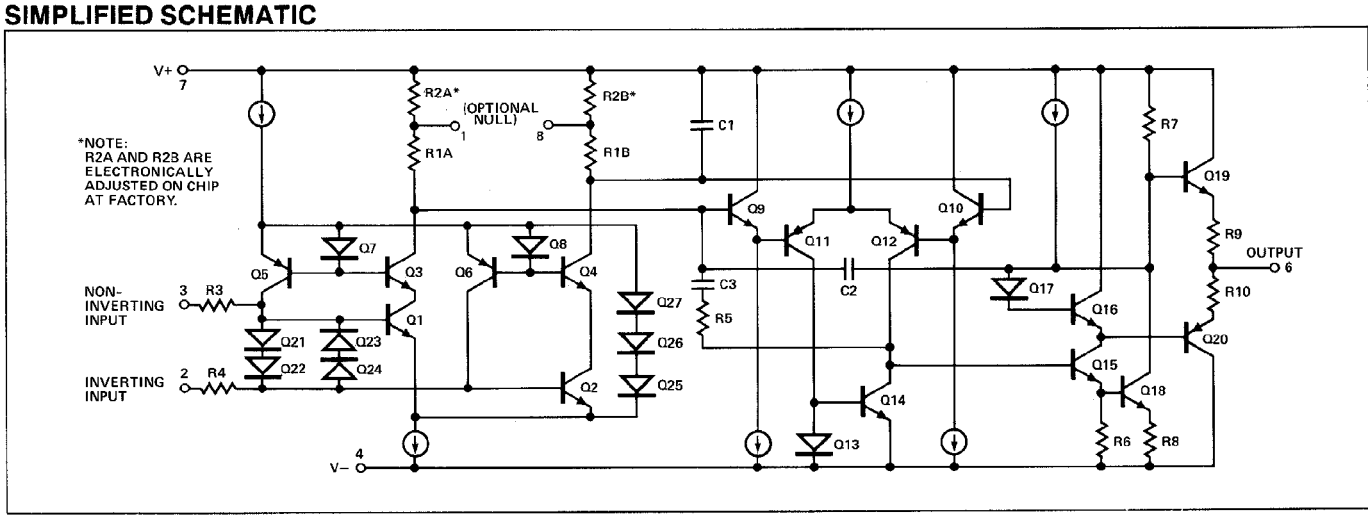

This product is available in six standard grades and five standard packages: the TO-99 can, the 8-pin mini-DIP in ceramic, SO or epoxy, and the 20-contact LCC.

The OP-77 is a direct or upgrade replacement for the OP-07, 05, 725, or 108A op amps. 741-types can be replaced by eliminating the V_{OS} adjust pot. For higher precision performance refer to OP-177.

ABSOLUTE MAXIMUM RATINGS (Note 2)

Supply Voltage ..... ±22V
Differential Input Voltage ..... ±30V
Input Voltage (Note 1) ..... ±22V
Output Short-Circuit Duration ..... Indefinite
Storage Temperature Range
J, Z, and RC Packages ..... –65°C to +150°C
P Package ..... –65°C to +125°C
Operating Temperature Range
OP-77A, OP-77B (J, Z, RC) ..... –55°C to +125°C
OP-77E, OPP-77F (J, Z) ..... –25°C to +85°C
OP-77E, OP-77F, OP-77G (P, S) ..... 0°C to 70°
OP-77H (P, S) ..... –40°C to +85°C
Junction Temperature (T_j) ..... –65°C to +150C
Lead Temperature (Soldering, 60 sec.) ..... +300°C

PACKAGE TYPE	Θ_{jA} (Note 3)	Θ_{jC}	UNITS
TO-99 (J)	150	18	°C/W
8-Pin Hermetic DIP (Z)	148	16	°C/W
8-Pin Plastic DIP (P)	103	43	°C/W
20-Contact LCC (RC, TC)	98	38	°C/W
8-Pin SO (S)	158	43	°C/W

NOTES:
1. For supply voltages less than ±22V, the absolute maximum input voltage is equal to the supply voltage.
2. Absolute maximum ratings apply to both DICE and packaged parts, unless otherwise noted.
3. Θ_{jA} is specified for worst case mounting conditions, i.e., Θ_{jA} is specified for device in socket for TO, CerDIP, P-DIP, and LCC packages; Θ_{jA} is specified for device soldered to printed circuit board for SO package.

ELECTRICAL CHARACTERISTICS at V_S = ±15V, T_A = +25°C, unless otherwise noted.

PARAMETER	SYMBOL	CONDITIONS	OP-77A MIN	OP-77A TYP	OP-77A MAX	OP-77B MIN	OP-77B TYP	OP-77B MAX	UNITS
Input Offset Voltage	V_{OS}		–	10	25	–	20	60	µV
Long-Term Input Offset Voltage Stability	ΔV_{OS}/Time	(Note 1)	–	0.2	–	–	0.2	–	µV/Mo
Input Offset Current	I_{OS}		–	0.3	1.5	–	0.3	2.8	nA
Input Bias Current	I_B		–0.2	1.2	2.0	–0.2	1.2	2.8	nA
Input Noise Voltage	e_{np-p}	0.1Hz to 10Hz (Note 2)	–	0.35	0.6	–	0.35	0.6	µVp-p
Input Noise Voltage Density	e_n	f_O = 10Hz (Note 2) f_O = 100Hz (Note 2) f_O = 1000Hz (Note 2)	– – –	10.3 10.0 9.6	18.0 13.0 11.0	– – –	10.3 10.0 9.6	18.0 13.0 11.0	V/√Hz
Input Noise Current	i_{np-p}	0.1Hz to 10Hz (Note 2)	–	14	30	–	14	30	pAp-p
Input Noise Current Density	i_n	f_O = 10Hz (Note 2) f_O = 100Hz (Note 2) f_O = 1000Hz (Note 2)	– – –	0.32 0.14 0.12	0.80 0.23 0.17	– – –	0.32 0.14 0.12	0.80 0.23 0.17	pA/√Hz
Input Resistance – Differential-Mode	R_{IN}	(Note 3)	26	45	–	18.5	45	–	MΩ
Input Resistance – Common-Mode	R_{INCM}		–	200	–	–	200	–	GΩ
Input Voltage Range	IVR		±13	±14	–	±13	±14	–	V
Common-Mode Rejection Ratio	CMRR	V_{CM} = ±13V	–	0.1	1.0	–	0.1	1.0	µV/V
Power Supply Rejection Ratio	PSRR	V_S = ±3V to ±18V	–	0.7	3	–	0.7	3	µV/V
Large-Signal Voltage Gain	A_{VO}	R_L ≥ 2kΩ, VO = ±10V	5000	12000	–	2000	8000	–	V/mV
Output Voltage Swing	V_O	R_L ≥ 10kΩ R_L ≥ 2kΩ R_L ≥ 1kΩ	±13.5 ±12.5 ±12.0	±14.0 ±13.0 ±12.5	– – –	±13.5 ±12.5 ±12.0	±14.0 ±13.0 ±12.5	– – –	V
Slew Rate	SR	R_L ≥ 2kΩ (Note 2)	0.1	0.3	–	0.1	0.3	–	V/µs
Closed-Loop Bandwidth	BW	A_{VCL} = +1 (Note 2)	0.4	0.6	–	0.4	0.6	–	MHz
Open-Loop Output Resistance	R_O		–	60	–	–	60	–	Ω
Power Consumption	P_d	V_S = ±15V, No Load V_S = ±3V, No Load	– –	50 3.5	60 4.5	– –	50 3.5	60 4.5	mW
Offset Adjustment Range		R_P = 20kΩ	–	±3	–	–	±3	–	mV

NOTES:
1. Long-Term Input Offset Voltage Stability refers to the averaged trend line of V_{OS} vs Time over extended periods after the first 30 days of operation. Excluding the initial hour of operation, changes in V_{OS} during the first 30 operating days are typically 2.5µV.
2. Sample tested.
3. Guaranteed by design.

ELECTRICAL CHARACTERISTICS at $V_S = \pm 15V$, $-55°C \leq T_A \leq +125°C$, unless otherwise noted.

PARAMETER	SYMBOL	CONDITIONS	OP-77A MIN	OP-77A TYP	OP-77A MAX	OP-77B MIN	OP-77B TYP	OP-77B MAX	UNITS
Input Offset Voltage	V_{OS}		—	25	60	—	45	120	μV
Average Input Offset Voltage Drift	TCV_{OS}	(Note 1)	—	0.1	0.3	—	0.2	0.6	μV/°C
Input Offset Current	I_{OS}		—	0.5	2.2	—	0.5	4.5	nA
Average Input Offset Current Drift	TCI_{OS}	(Note 2)	—	1.5	25	—	1.5	50	pA/°C
Input Bias Current	I_B		−0.2	2.4	4	−0.2	2.4	6	nA
Average Input Bias Current Drift	TCI_B	(Note 2)	—	8	25	—	15	35	pA/°C
Input Voltage Range	IVR		±13	±13.5	—	±13	±13.5	—	V
Common-Mode Rejection Ratio	CMRR	$V_{CM} = \pm 13V$	—	0.1	1.0	—	0.1	3	μV/V
Power Supply Rejection Ratio	PSRR	$V_S = \pm 3V$ to $\pm 18V$	—	1	3	—	1	5	μV/V
Large-Signal Voltage Gain	A_{VO}	$R_L \geq 2k\Omega$, $V_O = \pm 10V$	2000	6000	—	1000	4000	—	V/mV
Output Voltage Swing	V_O	$R_L \geq 2k\Omega$	±12	±13.0	—	±12	±13.0	—	V
Power Consumption	P_d	$V_S = \pm 15V$, No Load	—	60	75	—	60	75	mW

NOTES:
1. OP-77A: TCV_{OS} is 100% tested.
2. Guaranteed by end-point limits.

TYPICAL OFFSET VOLTAGE TEST CIRCUIT

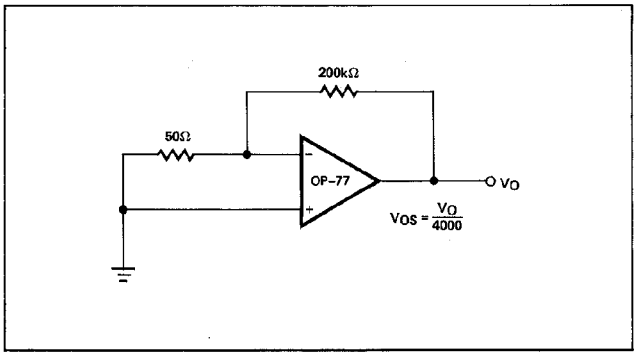

TYPICAL LOW-FREQUENCY NOISE TEST CIRCUIT

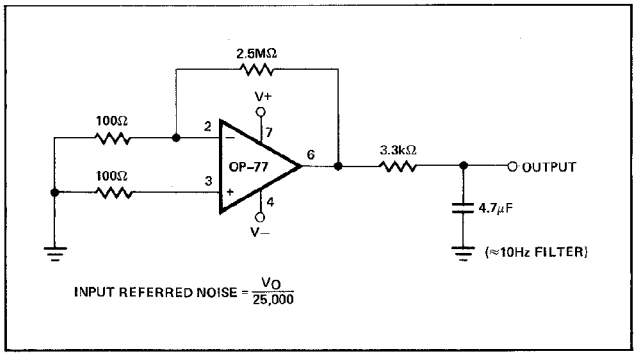

OPTIONAL OFFSET NULLING CIRCUIT

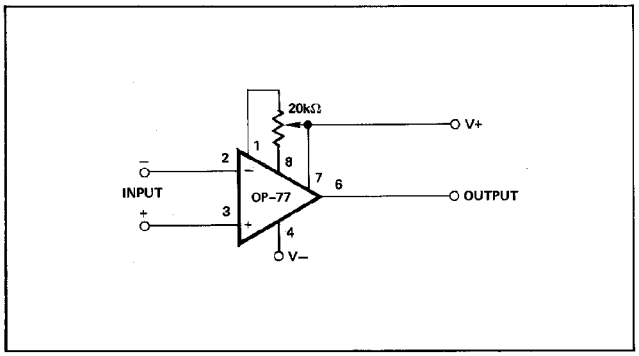

BURN-IN CIRCUIT

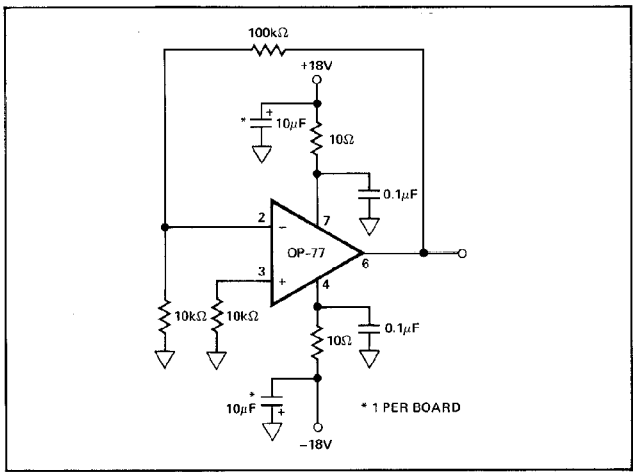

ELECTRICAL CHARACTERISTICS at $V_S = \pm 15V$, $T_A = 25°C$, unless otherwise noted.

PARAMETER	SYMBOL	CONDITIONS	OP-77E MIN	OP-77E TYP	OP-77E MAX	OP-77F MIN	OP-77F TYP	OP-77F MAX	OP-77G/H MIN	OP-77G/H TYP	OP-77G/H MAX	UNITS
Input Offset Voltage	V_{OS}		—	10	25	—	20	60	—	50	100	μV
Long-Term V_{OS} Stability	V_{OS}/Time	(Note 1)	—	0.3	—	—	0.4	—	—	0.4	—	μV/Mo
Input Offset Current	I_{OS}		—	0.3	1.5	—	0.3	2.8	—	0.3	2.8	nA
Input Bias Current	I_B		−0.2	1.2	2.0	−0.2	1.2	2.8	−0.2	1.2	2.8	nA
Input Noise Voltage	e_{np-p}	0.1Hz to 10Hz (Note 2)	—	0.35	0.6	—	0.38	0.65	—	0.38	0.65	μV_{p-p}
Input Noise Voltage Density	e_n	$f_O = 10Hz$	—	10.3	18.0	—	10.5	20.0	—	10.5	20.0	$nV/\sqrt{Hz}$
		$f_O = 100Hz$ (Note 2)	—	10.0	13.0	—	10.2	13.5	—	10.2	13.5	
		$f_O = 1000Hz$	—	9.6	11.0	—	9.8	11.5	—	9.8	11.5	
Input Noise Current	i_{np-p}	0.1Hz to 10Hz (Note 2)	—	14	30	—	15	35	—	15	35	pA_{p-p}
Input Noise Current Density	i_n	$f_O = 10Hz$	—	0.32	0.80	—	0.35	0.90	—	0.35	0.90	$pA/\sqrt{Hz}$
		$f_O = 100Hz$ (Note 2)	—	0.14	0.23	—	0.15	0.27	—	0.15	0.27	
		$f_O = 1000Hz$	—	0.12	0.17	—	0.13	0.18	—	0.13	0.18	
Input Resistance — Differential-Mode	R_{IN}	(Note 3)	26	45	—	18.5	45	—	18.5	45	—	MΩ
Input Resistance — Common-Mode	R_{INCM}		—	200	—	—	200	—	—	200	—	GΩ
Input Voltage Range	IVR		±13	±14	—	±13	±14	—	±13	±14	—	V
Common-Mode Rejection Ratio	CMRR	$V_{CM} = \pm 13V$	—	0.1	1.0	—	0.1	1.6	—	0.1	1.6	μV/V
Power Supply Rejection Ratio	PSRR	$V_S = \pm 3V$ to $\pm 18V$	—	0.7	3.0	—	0.7	3.0	—	0.7	3.0	μV/V
Large-Signal Voltage Gain	A_{VO}	$R_L \geq 2k\Omega$, $V_O = \pm 10V$	5000	12000	—	2000	6000	—	2000	6000	—	V/mV
Output Voltage Swing	V_O	$R_L \geq 10k\Omega$	±13.5	±14.0	—	±13.5	±14.0	—	±13.5	±14.0	—	V
		$R_L \geq 2k\Omega$	±12.5	±13.0	—	±12.5	±13.0	—	±12.5	±13.0	—	
		$R_L \geq 1k\Omega$	±12.0	±12.5	—	±12.0	±12.5	—	±12.0	±12.5	—	
Slew Rate	SR	$R_L \geq 2k\Omega$ (Note 2)	0.1	0.3	—	0.1	0.3	—	0.1	0.3	—	V/μs
Closed-Loop Bandwidth	BW	$A_{VCL} = +1$ (Note 2)	0.4	0.6	—	0.4	0.6	—	0.4	0.6	—	MHz
Open-Loop Output Resistance	R_O		—	60	—	—	60	—	—	60	—	Ω
Power Consumption	P_d	$V_S = \pm 15V$, No Load	—	50	60	—	50	60	—	50	60	mW
		$V_S = \pm 3V$, No Load	—	3.5	4.5	—	3.5	4.5	—	3.5	4.5	
Offset Adjustment Range		$R_P = 20k\Omega$	—	±3	—	—	±3	—	—	±3	—	mV

NOTES:

1. Long-Term Input Offset Voltage Stability refers to the averaged trend line of V_{OS} vs. Time over extended periods after the first 30 days of operation. Excluding the initial hour of operation, changes in V_{OS} during the first 30 operating days are typically 2.5μV.
2. Sample tested.
3. Guaranteed by design.

ELECTRICAL CHARACTERISTICS at V_S = ±15V, –25°C ≤ T_A ≤ +85°C for OP-77E/FJ and OP-77E/FZ, 0°C ≤ T_A ≤ +70°C for OP-77E/F/GP/GS, –40°C ≤ TA ≤ +85°C for OP-77HP/HS, unless otherwise noted.

PARAMETER	SYMBOL	CONDITIONS	OP-77E MIN	OP-77E TYP	OP-77E MAX	OP-77F MIN	OP-77F TYP	OP-77F MAX	OP-77G/H MIN	OP-77G/H TYP	OP-77G/H MAX	UNITS
Input Offset Voltage	V_{OS}	J, Z Packages P Package	– –	10 10	45 55	– –	20 20	100 100	– –	– 80	– 150	μV
Average Input Offset Voltage Drift	TVC_{OS}	J, Z Packages (Note 1) P Package (Note 1)	– –	0.1 0.3	0.3 0.6	– –	0.2 0.4	0.6 1.0	– –	– 0.7	– 1.2	μV/°C
Input Offset Current	I_{OS}		–	0.5	2.2	–	0.5	4.5	–	0.5	4.5	nA
Average Input Offset Current Drift	TCI_{OS}	(Note 2)	–	1.5	40	–	1.5	85	–	1.5	85	pA/°C
Input Bias Current	I_B	E, F, G Grades H Grade	–0.2 –	2.4 –	4.0 –	–0.2 –	2.4 –	6.0 –	–0.2 –	2.4 2.4	6.0 ±6.0	nA
Average Input Bias Current Drift	TCI_B	(Note 2)	–	8	40	–	15	60	–	15	60	pA/°C
Input Voltage Range	IVR		±13.0	±13.5	–	±13.0	±13.5	–	±13.0	±13.5	–	V
Common-Mode Rejection Ratio	CMRR	V_{CM} = ±13V	–	0.1	1.0	–	0.1	3.0	–	0.1	3.0	μV/V
Power Supply Rejection Ratio	PSRR	V_S = ±3V to ±18V	–	1.0	3.0	–	1.0	5.0	–	1.0	5.0	μV/V
Large-Signal Voltage Gain	A_{VO}	R_L ≥ 2kΩ V_O = ±10V	2000	6000	–	1000	4000	–	1000	4000	–	V/mV
Output Voltage Swing	V_O	R_L ≥ 2kΩ	±12	±13.0	–	±12	±13.0	–	±12	±13.0	–	V
Power Consumption	P_d	V_S = ±15V, No Load	–	60	75	–	60	75	–	60	75	mW

NOTES:
1. OP-77E: TCV_{OS} is 100% tested on J and Z packages.
2. Guaranteed by end-point limits.

OPEN-LOOP GAIN LINEARITY

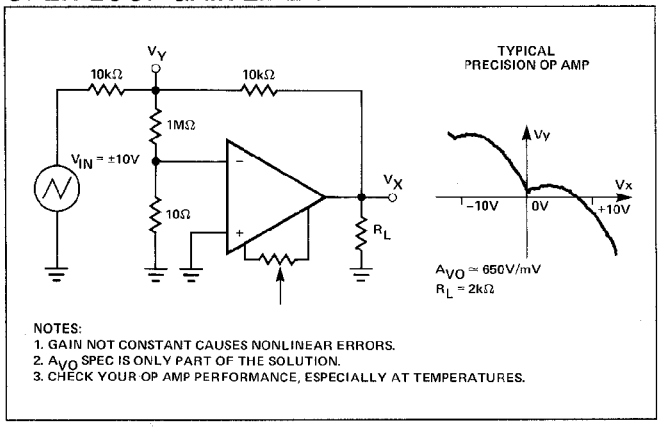

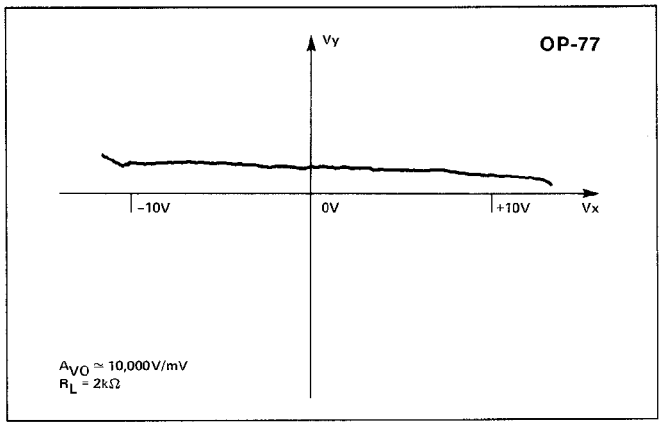

Actual open-loop voltage gain can vary greatly at various output voltages. All automated testers use end-point testing and therefore only show the average gain. This causes errors in high closed-loop gain circuits. Since this is so difficult for manufacturers to test, you should make your own evaluation. This simple test circuit makes it easy. An ideal op amp would show a horizontal scope trace.

This is the output gain linearity trace for the new OP-77. The output trace is virtually horizontal at all points, assuring extremely high gain accuracy. The average open-loop gain is truly impressive – approximately 10,000,000.

DICE CHARACTERISTICS

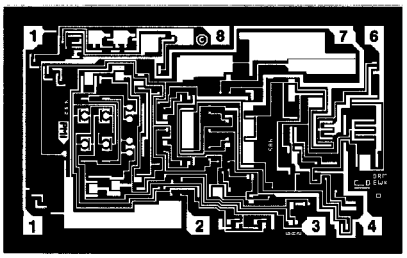

DIE SIZE 0.093 × 0.057 inch, 5301 sq. mils
(2.36 × 1.45 mm, 3.42 sq. mm)

1. BALANCE
2. INVERTING INPUT
3. NONINVERTING INPUT
4. V−
6. OUTPUT
7. V+
8. BALANCE

WAFER TEST LIMITS at $V_S = \pm 15V$, $T_A = 25°C$ for OP-77N/G devices.

PARAMETER	SYMBOL	CONDITIONS	OP-77N LIMIT	OP-77G LIMIT	UNITS
Input Offset Voltage	V_{OS}		40	75	μV MAX
Input Offset Current	I_{OS}		2.0	2.8	nA MAX
Input Bias Current	I_B		±2	±2.8	nA MAX
Input Resistance Differential-Mode	R_{IN}	(Note 1)	26	17	MΩ MIN
Input Voltage Range	IVR		±13	±13	V MIN
Common-Mode Rejection Ratio	CMRR	$V_{CM} = \pm 13V$	1	1.6	μV/V MAX
Power Supply Rejection Ratio	PSRR	$V_S = \pm 3V$ to $\pm 18V$	3	3	μV/V MAX
Output Voltage Swing	V_O	$R_L = 10k\Omega$ $R_L = 2k\Omega$ $R_L = 1k\Omega$	±13.5 ±12.5 ±12.0	±13.5 ±12.5 ±12.0	V MIN
Large-Signal Voltage Gain	A_{VO}	$R_L = 2k\Omega$ $V_O = \pm 10V$	2000	1000	V/mV MIN
Differential Input Voltage			±30	±30	V MAX
Power Consumption	P_d	$V_{OUT} = 0V$	60	60	mW MAX

NOTES:
1. Guaranteed by design.

Electrical tests are performed at wafer probe to the limits shown. Due to variations in assembly methods and normal yield loss, yield after packaging is not guaranteed for standard product dice. Consult factory to negotiate specifications based on dice lot qualification through sample lot assembly and testing.

TYPICAL ELECTRICAL CHARACTERISTICS at $V_S = \pm 15V$, $T_A = +25°C$, unless otherwise noted.

PARAMETER	SYMBOL	CONDITIONS	OP-77N TYPICAL	OP-77G TYPICAL	UNITS
Average Input Offset Voltage Drift	TCV_{OS}	$R_S = 50\Omega$	0.1	0.2	μV/°C
Nulled Input Offset Voltage Drift	TCV_{OSn}	$R_S = 50\Omega$, $R_P = 20k\Omega$	0.1	0.2	μV/°C
Average Input Offset Current Drift	TCI_{OS}		0.5	0.5	pA/°C
Slew Rate	SR	$R_L \geq 2k\Omega$	0.3	0.3	V/μs
Closed-Loop Bandwidth	BW	$A_{VCL} = +1$	0.6	0.6	MHz

TYPICAL PERFORMANCE CHARACTERISTICS

GAIN LINEARITY (INPUT VOLTAGE vs OUTPUT VOLTAGE)

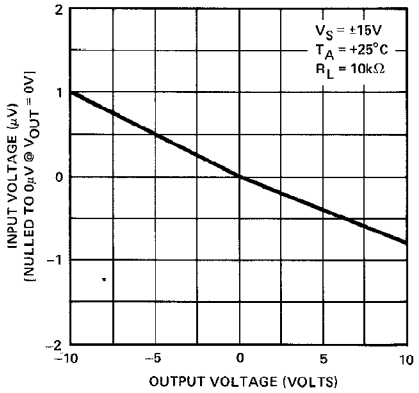

OPEN-LOOP GAIN vs TEMPERATURE

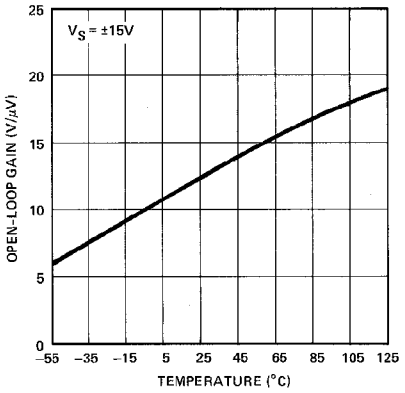

OPEN-LOOP GAIN vs POWER SUPPLY VOLTAGE

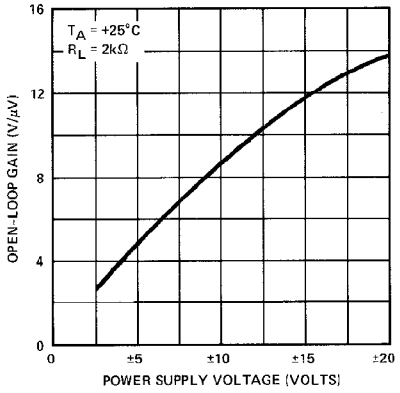

UNTRIMMED OFFSET VOLTAGE vs TEMPERATURE

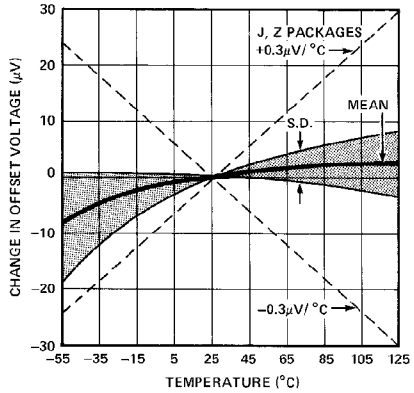

WARM-UP DRIFT

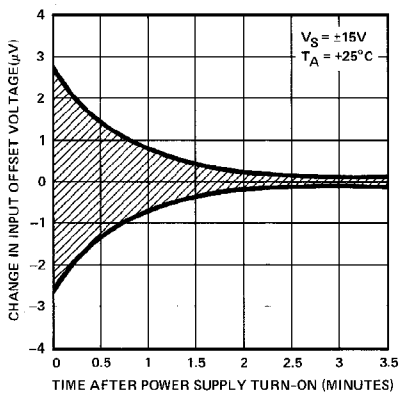

OFFSET VOLTAGE CHANGE DUE TO THERMAL SHOCK

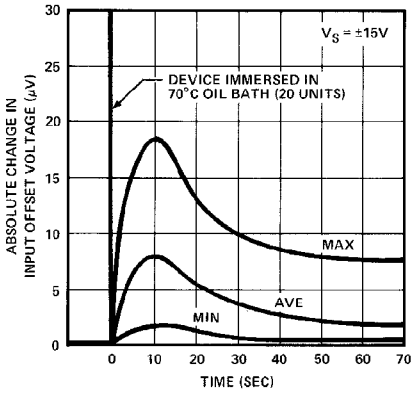

CLOSED-LOOP RESPONSE FOR VARIOUS GAIN CONFIGURATIONS

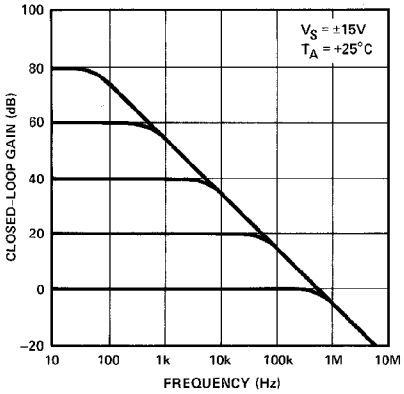

OPEN-LOOP GAIN/PHASE RESPONSE

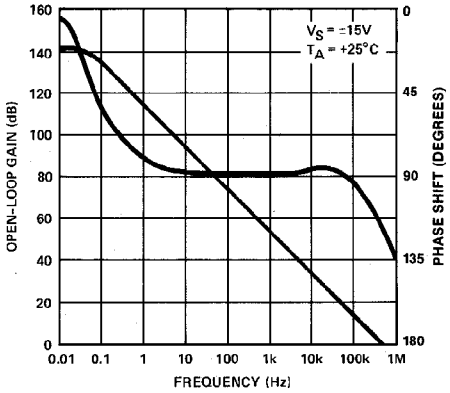

CMRR vs FREQUENCY

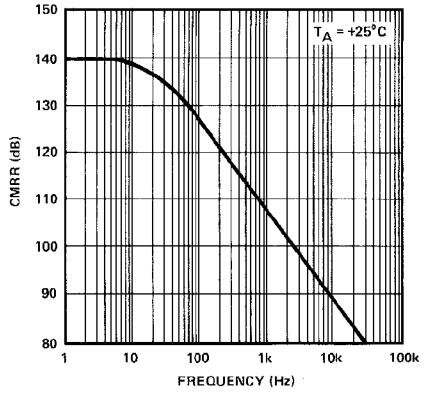

TYPICAL PERFORMANCE CHARACTERISTICS

PSRR vs FREQUENCY

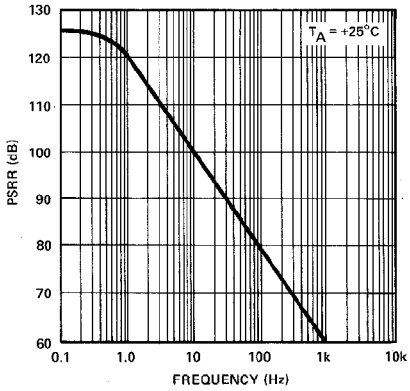

INPUT BIAS CURRENT vs TEMPERATURE

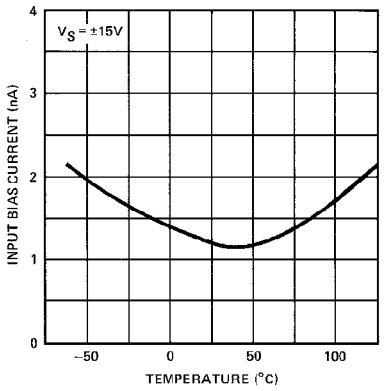

INPUT OFFSET CURRENT vs TEMPERATURE

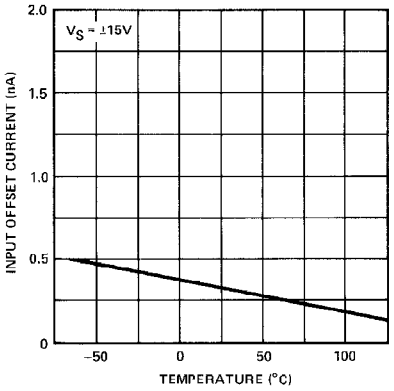

INPUT WIDEBAND NOISE vs BANDWIDTH (0.1Hz TO FREQUENCY INDICATED)

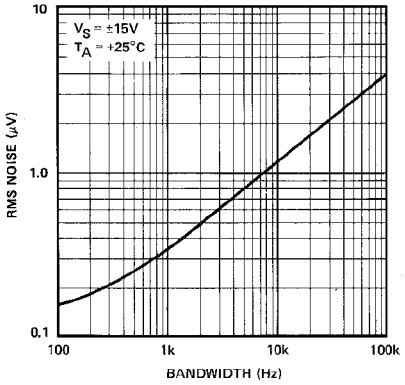

TOTAL INPUT NOISE VOLTAGE vs FREQUENCY

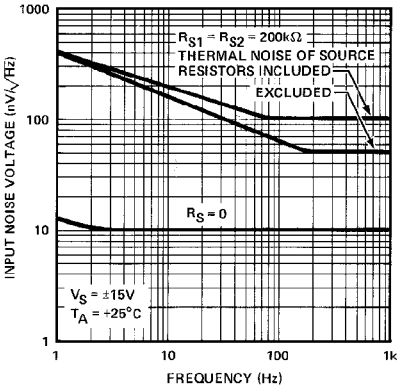

MAXIMUM OUTPUT SWING vs FREQUENCY

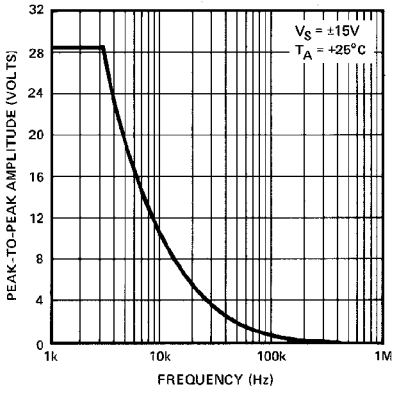

POWER CONSUMPTION vs POWER SUPPLY

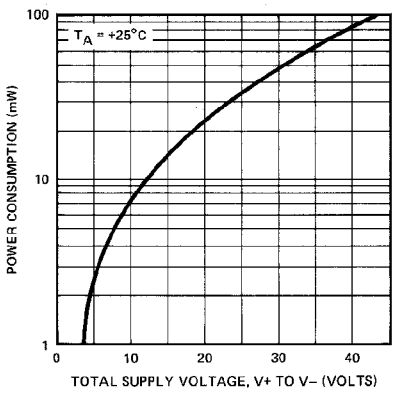

MAXIMUM OUTPUT VOLTAGE vs LOAD RESISTANCE

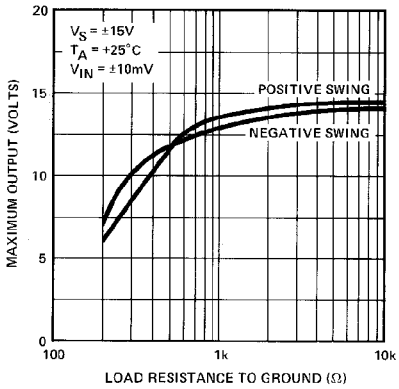

OUTPUT SHORT-CIRCUIT CURRENT vs TIME

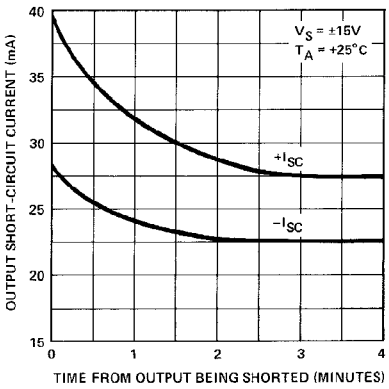

APPLICATIONS INFORMATION

PRECISION HIGH-GAIN DIFFERENTIAL AMPLIFIER

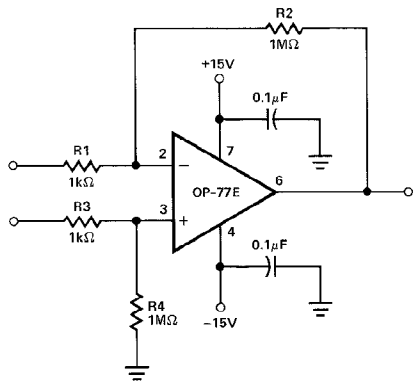

The high gain, gain linearity, CMRR, and low TCV_{OS} of the OP-77 make it possible to obtain performance not previously available in single stage very high-gain amplifier applications.

For best CMR, $\frac{R1}{R2}$ must equal $\frac{R3}{R4}$. In this example, with a 10mV differential signal, the maximum errors are as listed.

TYPE	AMOUNT
COMMON-MODE VOLTAGE	0.01%/V
GAIN LINEARITY, WORST CASE	0.02%
TCV_{OS}	0.003%/°C
TCI_{OS}	0.008%/°C

ISOLATING LARGE CAPACITIVE LOADS

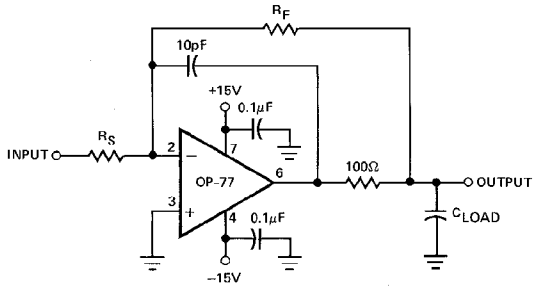

This circuit reduces maximum slew-rate but allows driving capacitive loads of any size without instability. Because the 100Ω resistor is inside the feedback loop, its effect on output impedance is reduced to insignificance by the high open-loop gain of the OP-77.

BILATERAL CURRENT SOURCE

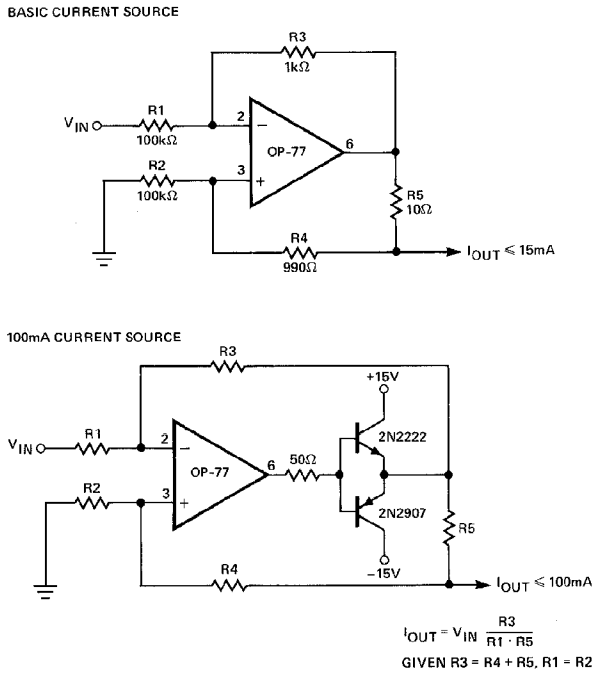

These current sources will supply both positive and negative current into a grounded load.

Note that $Z_O = \dfrac{R5\left(\dfrac{R4}{R2}+1\right)}{\dfrac{R5+R4}{R2} - \dfrac{R3}{R1}}$

and that for Z_O to be infinite,

$\dfrac{R5+R4}{R2}$ must $= \dfrac{R3}{R1}$.

PRECISION CURRENT SINKS

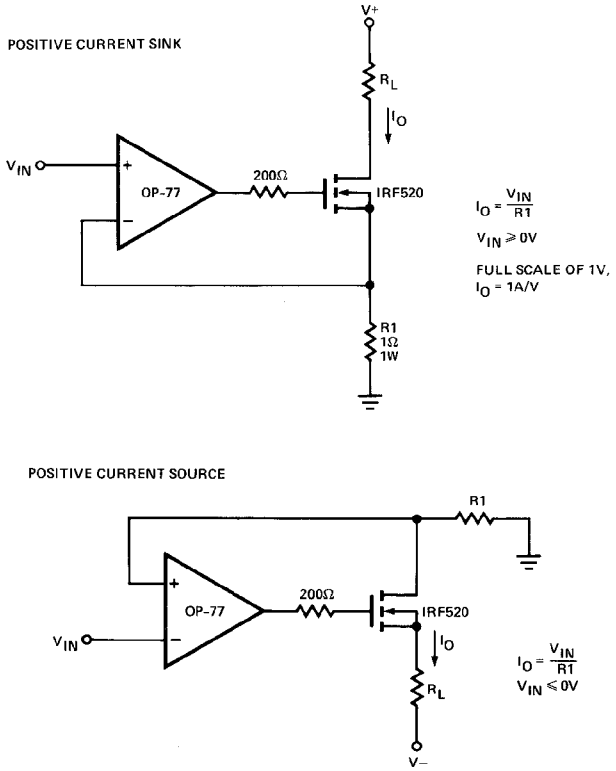

These simple high current sinks require that the load float between the power supply and the sink.

In these circuits, OP-77's high gain, high CMRR, and low TCV_{OS} assure high accuracy.

HIGH STABILITY VOLTAGE REFERENCE

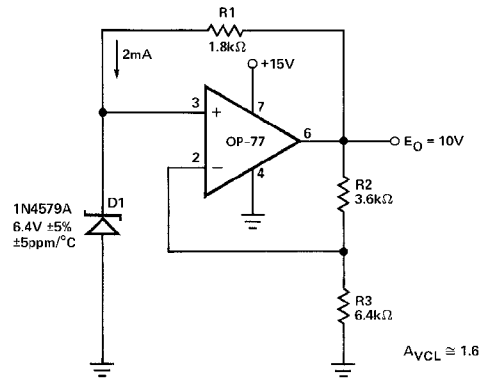

This simple bootstrapped voltage reference provides a precise 10 volts virtually independent of changes in power supply voltage, ambient temperature, and output loading. Correct zener operating current of exactly 2mA is maintained by R1, a selected 5ppm/°C resistor, connected to the regulated output. Accuracy is primarily determined by three factors: the 5ppm/°C temperature coefficient of D1, 1ppm/°C ratio tracking of R2 and R3, and operational amplifier V_{OS} errors.

V_{OS} errors, amplified by 1.6 (A_{VCL}), appear at the output and can be significant with most monolithic amplifiers. For example: an ordinary amplifier with TCV_{OS} of 5μV/°C contributes 0.8ppm/°C of output error while the OP-77, with TCV_{OS} of 0.3μV/°C, contributes but 0.05ppm/°C of output error, thus effectively eliminating TCV_{OS} as an error consideration.

PRECISION ABSOLUTE VALUE AMPLIFIER

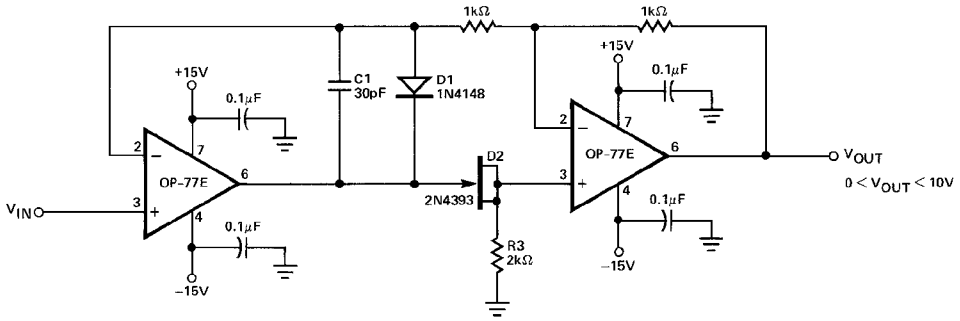

The high gain and low TCV_{OS} assure accurate operation with inputs from microvolts to volts. In this circuit, the signal always appears as a common-mode signal to the op amps. The OP-77E CMRR of 1μV/V assures errors of less than 2ppm.

LOW NOISE PRECISION REFERENCE

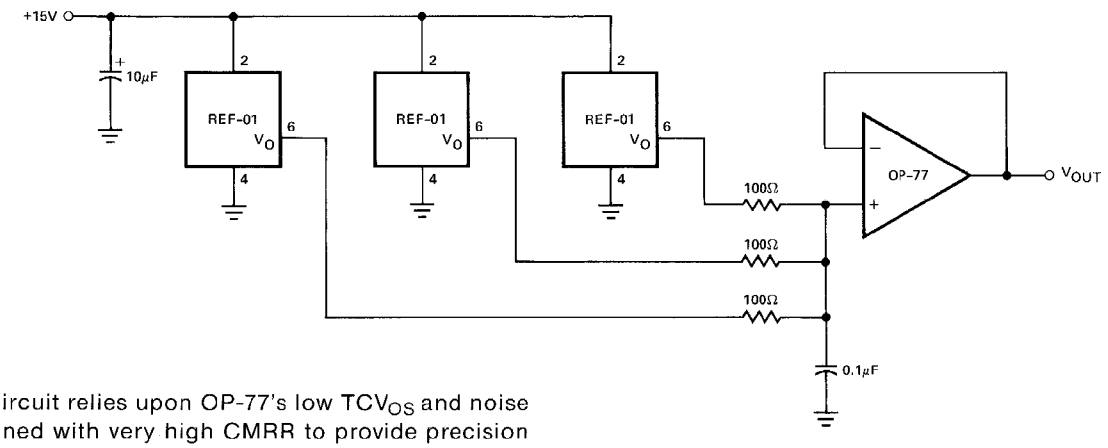

This circuit relies upon OP-77's low TCV_{OS} and noise combined with very high CMRR to provide precision buffering of the averaged REF-01 voltage outputs.

PRECISION POSITIVE PEAK DETECTOR

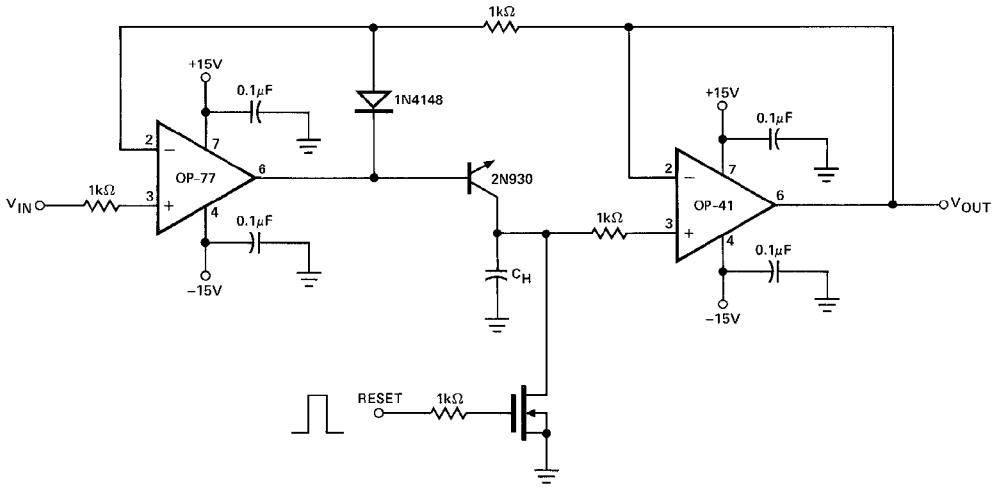

C_H must be of polystyrene, Teflon*, or polyethylene to minimize dielectric absorption and leakage. The droop rate is determined by the size of C_H and the bias current of the OP-41.

*Teflon is a registered trademark of the Dupont Company.

PRECISION THRESHOLD DETECTOR/ AMPLIFIER

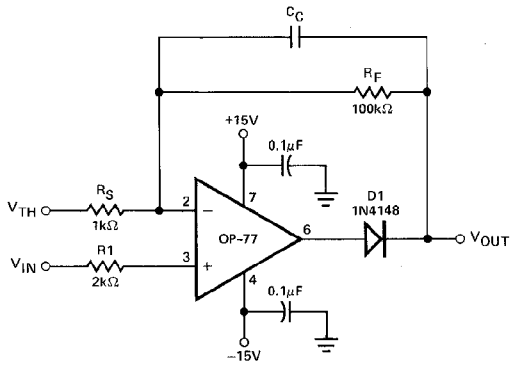

When $V_{IN} < V_{TH}$, amplifier output swings negative, reverse biasing diode D1. $V_{OUT} = V_{TH}$ if $R_L = \infty$. When $V_{IN} \geq V_{TH}$, the loop closes,

$$V_{OUT} = V_{TH} + (V_{IN} - V_{TH})\left(1 + \frac{R_F}{R_S}\right).$$

C_C is selected to smooth the response of the loop.

PRECISION TEMPERATURE SENSOR

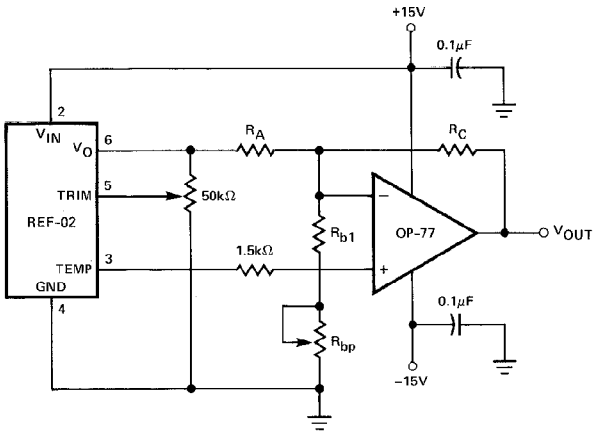

RESISTOR VALUES

TCV_{OUT} SLOPE (S)	10mV/°C	100mV/°C	10mV/°F
TEMPERATURE RANGE	−55°C to +125°C	−55°C to +125°C	−67°F to +257°C
OUTPUT VOLTAGE RANGE	−0.55V to +1.25V	−5.5V to +12.5V	−0.67V to +2.57V
ZERO-SCALE	0V @ 0°C	0V @ 0°C	0V @ 0°F
R_a (±1% Resistor)	9.09kΩ	15kΩ	7.5kΩ
R_{b1} (±1% Resistor)	1.5kΩ	1.82kΩ	1.21kΩ
R_{bp} (Potentiometer)	200Ω	500Ω	200Ω
R_c (±1% Resistor)	5.11kΩ	84.5kΩ	8.25kΩ

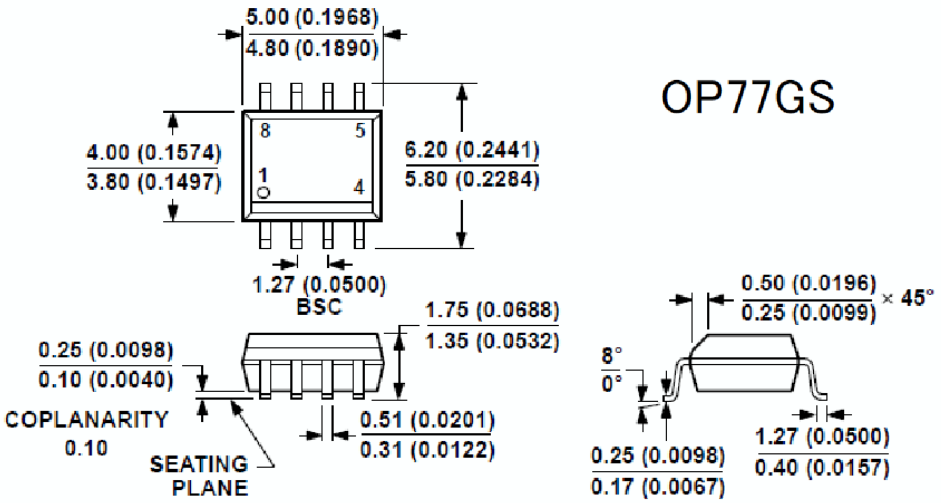

COMPLIANT TO JEDEC STANDARDS MS-012-AA

CONTROLLING DIMENSIONS ARE IN MILLIMETERS; INCH DIMENSIONS (IN PARENTHESES) ARE ROUNDED-OFF MILLIMETER EQUIVALENTS FOR REFERENCE ONLY AND ARE NOT APPROPRIATE FOR USE IN DESIGN.

012407-A

Figure 35. 8-Lead Standard Small Outline Package (SOIC_N)
S-Suffix
(R-8)
Dimensions shown in millimeters and(inches)