8-LINE TO 1-LINE DATA SELECTORS/MULTIPLEXERS/REGISTERS

SDLS164 – JULY 1979 – REVISED MARCH 1988

- **Transparent Latches on Data Select Inputs**
- **Complementary Outputs**
- **Easily Expandable**
- **High-Density 20-Pin Package**

	DATA REGISTERS	OUTPUTS
'LS354	Transparent	3-State
'LS355	Transparent	Open-Collector
'LS356	Edge-Triggered	3-State

description

These monolithic data selectors/multiplexers contain full on-chip binary decoding to select one of eight data sources. The data-select address is stored in transparent latches that are enabled by a low level on pin 11, $\overline{SC}$. On the 'LS354 and 'LS355 a similar enable for data is obtained by a low level on pin 9, $\overline{DC}$. The edge-triggered data registers of the 'LS356 is clocked by a low-to-high transition on pin 9, CLK. Complementary outputs are available in either three-state versions ('LS354 and 'LS356) or open-collector version ('LS355).

The SN54LS354 through SN54LS356 are characterized for operation over the full military temperature range of −55°C to 125°C. The SN74LS354 through SN74LS356 are characterized for operation from 0°C to 70°C.

SN54LS354, SN54LS355 . . . J PACKAGE
SN74LS354, SN74LS355 . . . DW OR N PACKAGE
(TOP VIEW)

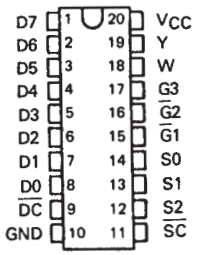

SN54LS354, SN54LS355 . . . FK PACKAGE
(TOP VIEW)

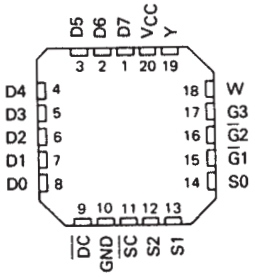

SN54LS356 . . . J OR W PACKAGE
SN74LS356 . . . DW OR N PACKAGE
(TOP VIEW)

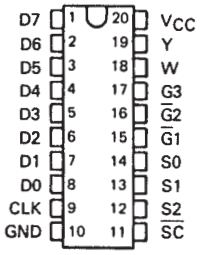

SN54LS356 . . . FK PACKAGE
(TOP VIEW)

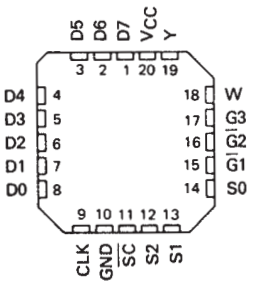

FUNCTION TABLE

INPUTS								OUTPUTS	
SELECT			DATA CONTROL ('LS354, 'LS355)	CLOCK ('LS356)	OUTPUT ENABLES				
S2	S1	S0			$\overline{G1}$	$\overline{G2}$	G3	W	Y
X	X	X	X	X	H	X	X	Z	Z
X	X	X	X	X	X	H	X	Z	Z
X	X	X	X	X	X	X	L	Z	Z
L	L	L	L	↑	L	L	H	$\overline{D0}$	D0
L	L	L	H	H or L	L	L	H	$\overline{D0}_n$	$D0_n$
L	L	H	L	↑	L	L	H	$\overline{D1}$	D1
L	L	H	H	H or L	L	L	H	$\overline{D1}_n$	$D1_n$
L	H	L	L	↑	L	L	H	$\overline{D2}$	D2
L	H	L	H	H or L	L	L	H	$\overline{D2}_n$	$D2_n$
L	H	H	L	↑	L	L	H	$\overline{D3}$	D3
L	H	H	H	H or L	L	L	H	$\overline{D3}_n$	$D3_n$
H	L	L	L	↑	L	L	H	D4	D4
H	L	L	H	H or L	L	L	H	$\overline{D4}_n$	$D4_n$
H	L	H	L	↑	L	L	H	$\overline{D5}$	D5
H	L	H	H	H or L	L	L	H	$\overline{D5}_n$	$D5_n$
H	H	L	L	↑	L	L	H	$\overline{D6}$	D6
H	H	L	H	H or L	L	L	H	$\overline{D6}_n$	$D6_n$
H	H	H	L	↑	L	L	H	$\overline{D7}$	D7
H	H	H	H	H or L	L	L	H	$\overline{D7}_n$	$D7_n$

H = high level (steady state)
L = low level (steady state)
X = irrelevant (any input, including transitions)
Z = high-impedance state (off state)
↑ = transition from low to high level
D0 . . . D7 = the level of steady-state inputs at inputs D0 through D7, respectively, at the time of the low-to-high clock transition in the cae of 'LS356.
$D0_n$ . . . $D7_n$ = the level of steady state inputs at inputs D0 through D7, respectively, before the most recent low-to-high transition of data control or clock
This column shows the input address setup with $\overline{SC}$ low.

TYPICAL OF BOTH OUTPUTS ON 'LS355

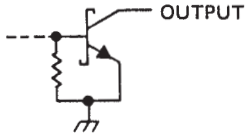

schematics of inputs and outputs

EQUIVALENT OF EACH DATA OR SELECT INPUT

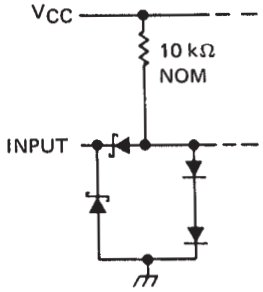

EQUIVALENT OF ALL OTHER INPUTS

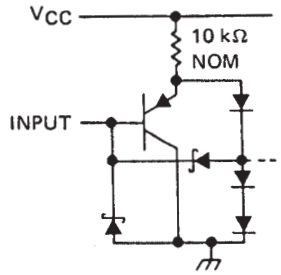

TYPICAL OF BOTH OUTPUTS ON 'LS354 AND 'LS356

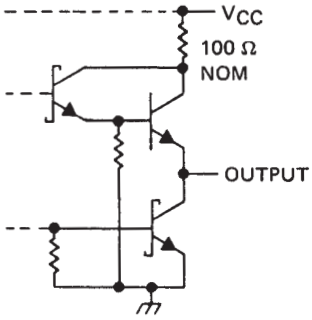

absolute maximum ratings over operating free-air temperature range (unless otherwise noted)

Supply voltage (see Note 1). . . . . 7 V
Input voltage. . . . . 7 V
Operating free-air temperature range: SN54LS'. . . . . – 55° C to 125° C
SN74LS'. . . . . 0° C to 70° C
Storage temperature range . . . . . – 65° C to 150° C

NOTE 1: Voltage values are with respect to network ground terminal.

logic symbols†

'LS354

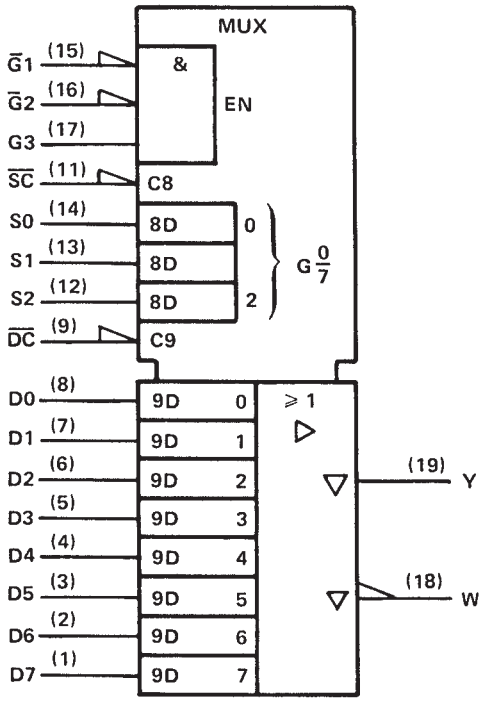

'LS355

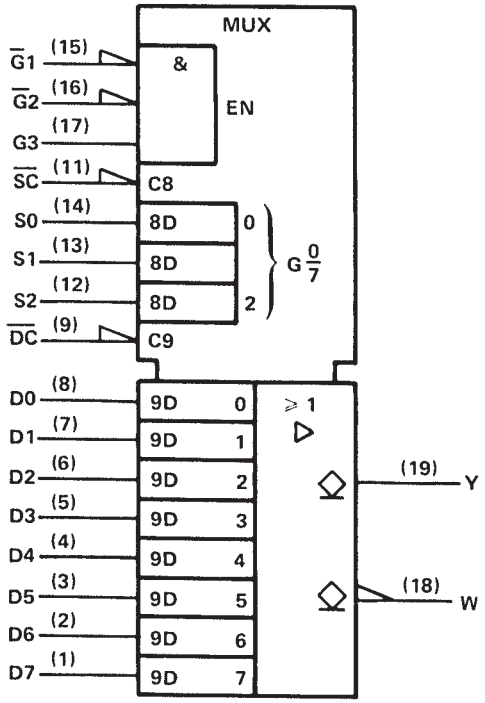

'LS356

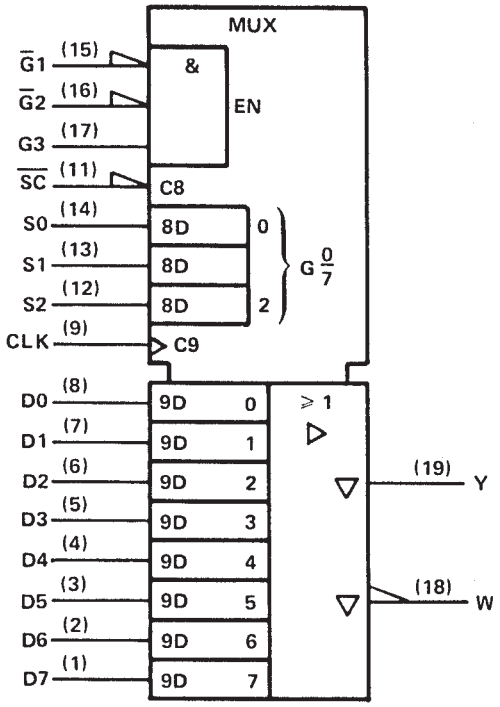

†This symbol is in accordance with ANSI/IEEE Std. 91-1984 and IEC Publication 617-12.
Pin numbers shown are for DW, J, N, and W packages.

logic diagram (positive logic)

'LS354, 'LS355

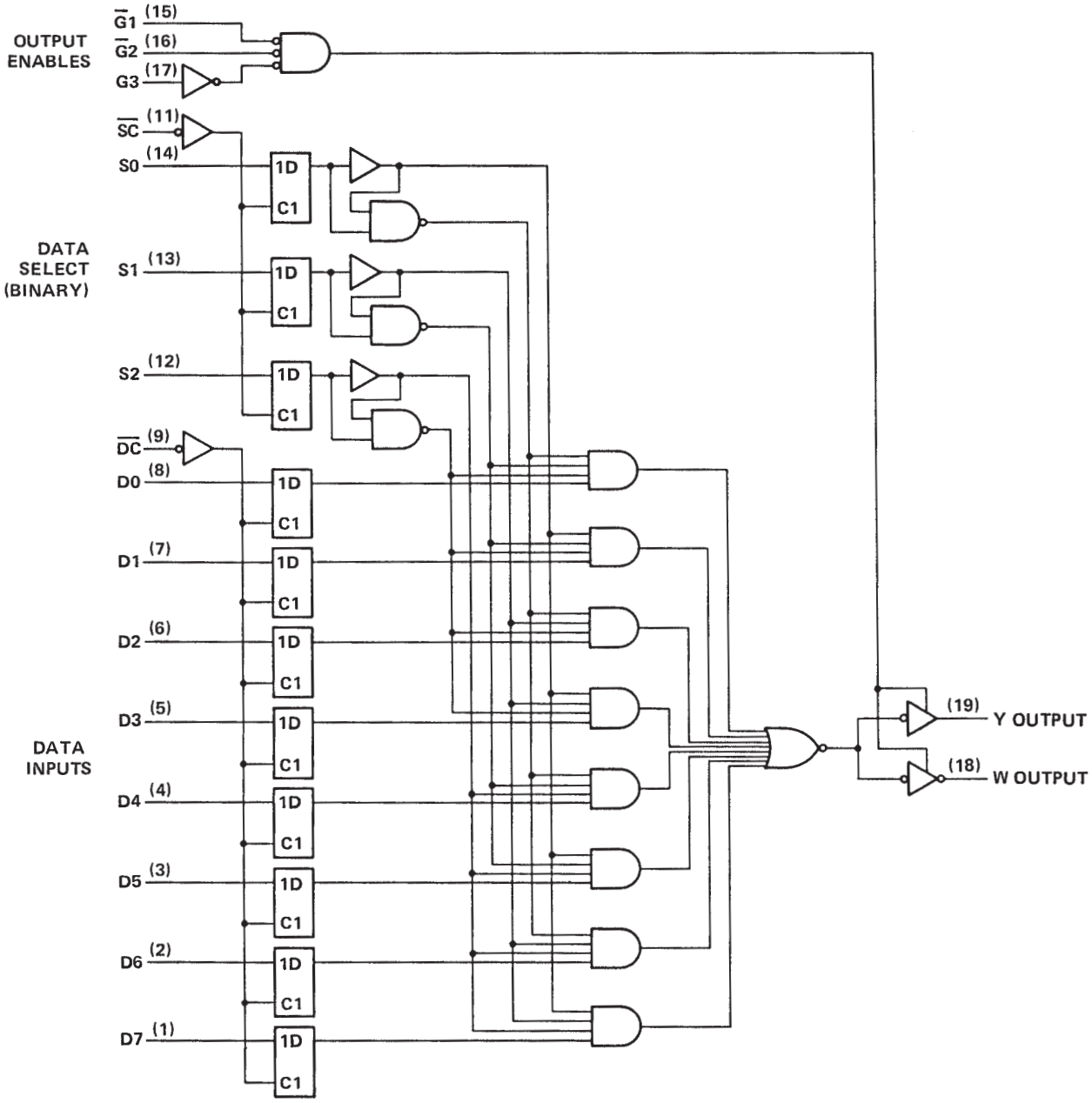

Pin numbers shown are for DW, J and N packages.

logic diagram (positive logic)

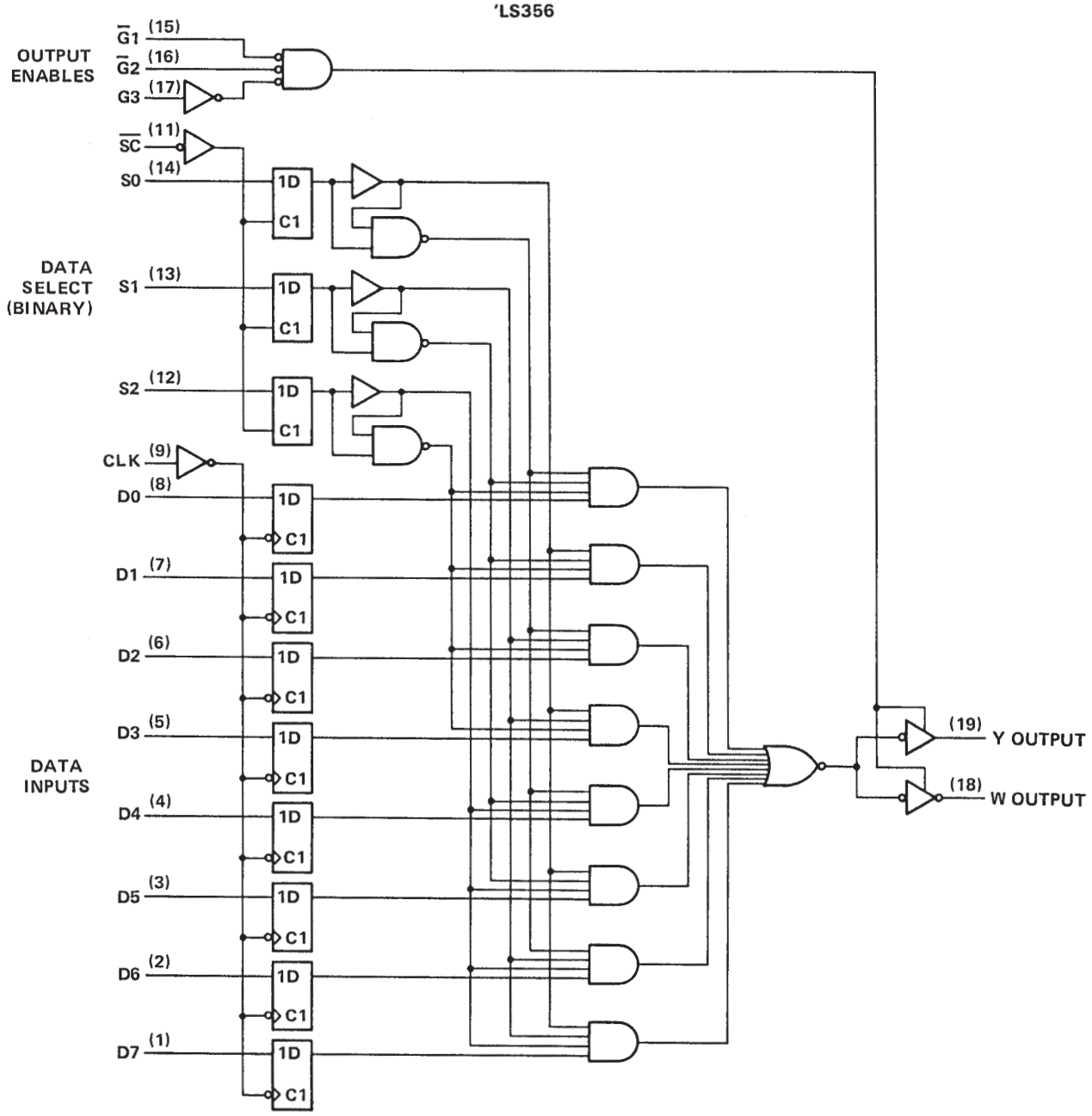

Pin numbers shown are for DW, J, N, and W packages.

recommended operating conditions

			SN54LS354 SN54LS356			SN74LS354 SN74LS356			UNIT
			MIN	NOM	MAX	MIN	NOM	MAX	
V_{CC}	Supply voltage		4.5	5	5.5	4.75	5	5.25	V
V_{IH}	High-level input voltage		2			2			V
V_{IL}	Low-level input voltage				0.7			0.8	V
I_{OH}	High-level output current				–1			–2.6	mA
I_{OL}	Low-level output current				12			24	mA
t_{su}	Setup times, high-or-low-level data (with respect to ↑ at pin 9)	'LS354	15			15			ns
		'LS356	15			15			
t_h	Hold times, high-or-low-level data (with respect to ↑ at pin 9)	'LS354	15			15			ns
		'LS356	0			0			
T_A	Operating free-air temperature		–55		125	0		70	°C

electrical characteristics over recommended operating free-air temperature range (unless otherwise noted)

PARAMETER		TEST CONDITIONS†		SN54LS354 SN54LS356			SN74LS354 SN74LS356			UNIT
				MIN	TYP‡	MAX	MIN	TYP‡	MAX	
V_{IK}		V_{CC} = MIN, I_I = – 18 mA				– 1.5			– 1.5	V
V_{OH}		V_{CC} = MIN, V_{IH} = 2 V, V_{IL} = MAX, I_{OH} = MAX,		2.4			2.4			V
V_{OL}		V_{CC} = MIN, V_{IH} = 2 V, V_{IL} = MAX	I_{OL} = 12 mA		0.25	0.4		0.25	0.4	V
			I_{OL} = 24 mA					0.35	0.5	
I_{OZ}		V_{CC} = MAX	V_O = 2.7 V			20			20	μA
			V_O = 0.4 V			– 20			– 20	
I_I		V_{CC} = MAX, V_I = 7 V				0.1			0.1	mA
I_{IH}		V_{CC} = MAX, V_I = 2.7 V				20			20	μA
I_{IL}	$\overline{DC}$ or CLK, $\overline{G}1$, $\overline{G}2$, G3	V_{CC} = MAX, V_I = 0.4 V				– 0.2			– 0.2	mA
	All others					– 0.4			– 0.4	
I_{OS}§		V_{CC} = MAX		– 30		– 130	– 30		– 130	mA
I_{CC}		V_{CC} = MAX, See Note 2			29	46		29	46	mA

† For conditions shown as MIN or MAX, use the appropriate values specified under recommended operating conditions.
‡ All typical values are at V_{CC} = 5 V, T_A = 25°C.
§ Not more than one output should be shorted at a time, and duration of the short-circuit should not exceed one second.
NOTE 2: I_{CC} is measured with the inputs grounded and the outputs open.

switching characteristics, V_{CC} = 5 V, T_A = 25°C, R_L = 667 Ω

PARAMETER	FROM (INPUT)	TO (OUTPUT)	TEST CONDITIONS	'LS354			'LS356			UNIT
				MIN	TYP	MAX	MIN	TYP	MAX	
t_{PLH}	D0-D7	Y	C_L = 45 pF, See Note 3		24	36				ns
t_{PHL}					23	35				
t_{PLH}		W			18	27				ns
t_{PHL}					29	44				
t_{PLH}	$\overline{DC}$ or CLK	Y			28	42		18	27	ns
t_{PHL}					26	39		33	50	
t_{PLH}		W			22	33		24	36	ns
t_{PHL}					33	50		18	27	
t_{PLH}	S0, S1 S2	Y			29	44		30	45	ns
t_{PHL}					24	45		28	48	
t_{PLH}		W			28	42		36	54	ns
t_{PHL}					34	51		30	45	
t_{PLH}	$\overline{SC}$	Y			34	51		36	54	ns
t_{PHL}					31	47		40	60	
t_{PLH}		W			27	41		32	48	ns
t_{PHL}					40	60		36	54	
t_{PZH}	$\overline{G}1$, $\overline{G}2$	Y			14	27		14	25	ns
t_{PZL}					18	27		17	25	
t_{PHZ}			C_L = 5 pF, See Note 3		15	25		16	24	ns
t_{PLZ}					15	25		16	24	
t_{PZH}		W	C_L = 45 pF, See Note 3		12	24		14	23	ns
t_{PZL}					16	24		16	23	
t_{PHZ}			C_L = 5 pF, See Note 3		15	25		16	23	ns
t_{PLZ}					15	25		16	23	
t_{PZH}	G3	Y	C_L = 45 pF, See Note 3		15	29		15	27	ns
t_{PZL}					19	29		18	27	
t_{PHZ}			C_L = 5 pF, See Note 3		15	25		16	25	ns
t_{PLZ}					15	25		16	25	
t_{PZH}		W	C_L = 45 pF, See Note 3		13	25		14	25	ns
t_{PZL}					17	25		16	25	
t_{PHZ}			C_L = 5 pF, See Note 3		15	25		16	25	ns
t_{PLZ}					15	25		16	25	

NOTE 3: Load circuits and voltage waveforms are shown in Section 1.

recommended operating conditions

		SN54LS355			SN74LS355			UNIT
		MIN	NOM	MAX	MIN	NOM	MAX	
V_{CC}	Supply voltage	4.5	5	5.5	4.75	5	5.25	V
V_{IH}	High-level input voltage	2			2			V
V_{IL}	Low-level input voltage			0.7			0.8	V
V_{OH}	High-level output voltage			5.5			5.5	V
I_{OL}	Low-level output current			12			24	mA
t_{su}	Setup times, high-or-low-level data, (with respect to ↑ at pin 9)	15			15			ns
t_h	Hold times, high-or low-level data (with respect to ↑ at pin 9)	15			15			ns
T_A	Operating free-air temperature	−55		125	0		70	°C

electrical characteristics over recommended operating free-air temperature range (unless otherwise noted)

PARAMETER		TEST CONDITIONS†			SN54LS355			SN74LS355			UNIT
					MIN	TYP‡	MAX	MIN	TYP‡	MAX	
V_{IK}		V_{CC} = MIN,	I_I = −18 mA				−1.5			−1.5	V
I_{OH}		V_{CC} = MIN, V_{OH} = 5.5 V	V_{IH} = 2 V,	V_{IL} = MAX			0.1			0.1	mA
V_{OL}		V_{CC} = MIN, V_{IL} = MAX	V_{IH} = 2 V,	I_{OL} = 12 mA		0.25	0.4		0.25	0.4	V
				I_{OL} = 24 mA					0.35	0.5	
I_I		V_{CC} = MAX,	V_I = 7 V				0.1			0.1	mA
I_{IH}		V_{CC} = MAX,	V_I = 2.7 V				20			20	μA
I_{IL}	$\overline{DC}$ or CLK, $\overline{G}1$, $\overline{G}2$, G3	V_{CC} = MAX,	V_I = 0.4 V				−0.2			−0.2	mA
	All others						−0.4			−0.4	
I_{CC}		V_{CC} = MAX,	See Note 2			29	46		29	46	mA

† For conditions shown as MIN or MAX, use the appropriate value specified under recommended operating conditions for the applicable type.
‡ All typical values are at V_{CC} = 5 V, T_A = 25°C.
NOTE 2: I_{CC} is measured with the inputs grounded and the outputs open.

switching characteristics, V_{CC} = 5 V, T_A = 25°C, R_L = 667 Ω

PARAMETER	FROM (INPUT)	TO (OUTPUT)	TEST CONDITIONS	'LS355 MIN	'LS355 TYP	'LS355 MAX	UNIT
t_{PLH}	D0-D7	Y	C_L = 45 pF, See Note 3		34	41	ns
t_{PHL}					26	39	
t_{PLH}		W			30	45	ns
t_{PHL}					33	50	
t_{PLH}	$\overline{DC}$ or CLK	Y			38	57	ns
t_{PHL}					31	47	
t_{PLH}		W			33	50	ns
t_{PHL}					39	59	
t_{PLH}	S0, S1, S2	Y			39	59	ns
t_{PHL}					36	49	
t_{PLH}		W			32	48	ns
t_{PHL}					39	58	
t_{PLH}	$\overline{SC}$	Y			45	68	ns
t_{PHL}					42	63	
t_{PLH}		W			44	66	ns
t_{PHL}					45	68	
t_{PHL}	$\overline{G}1$, $\overline{G}2$	Y			21	32	ns
t_{PHL}					22	33	
t_{PLH}		W			18	27	ns
t_{PHL}					19	29	
t_{PLH}	G3	Y			24	36	ns
t_{PHL}					25	40	
t_{PLH}		W			19	31	ns
t_{PHL}					19	29	

NOTE 3: Load circuits and voltage waveforms are shown in Section 1.